samtec | gEEk® spEEk

Mechanical Considerations for Compression Mount RF Connectors

Zak Speraw | Samtec, Inc.

CURRENT & NEXT GEN CONNECTIVITY

BOARD-TO-BOARD | SILICON-TO-SILICON

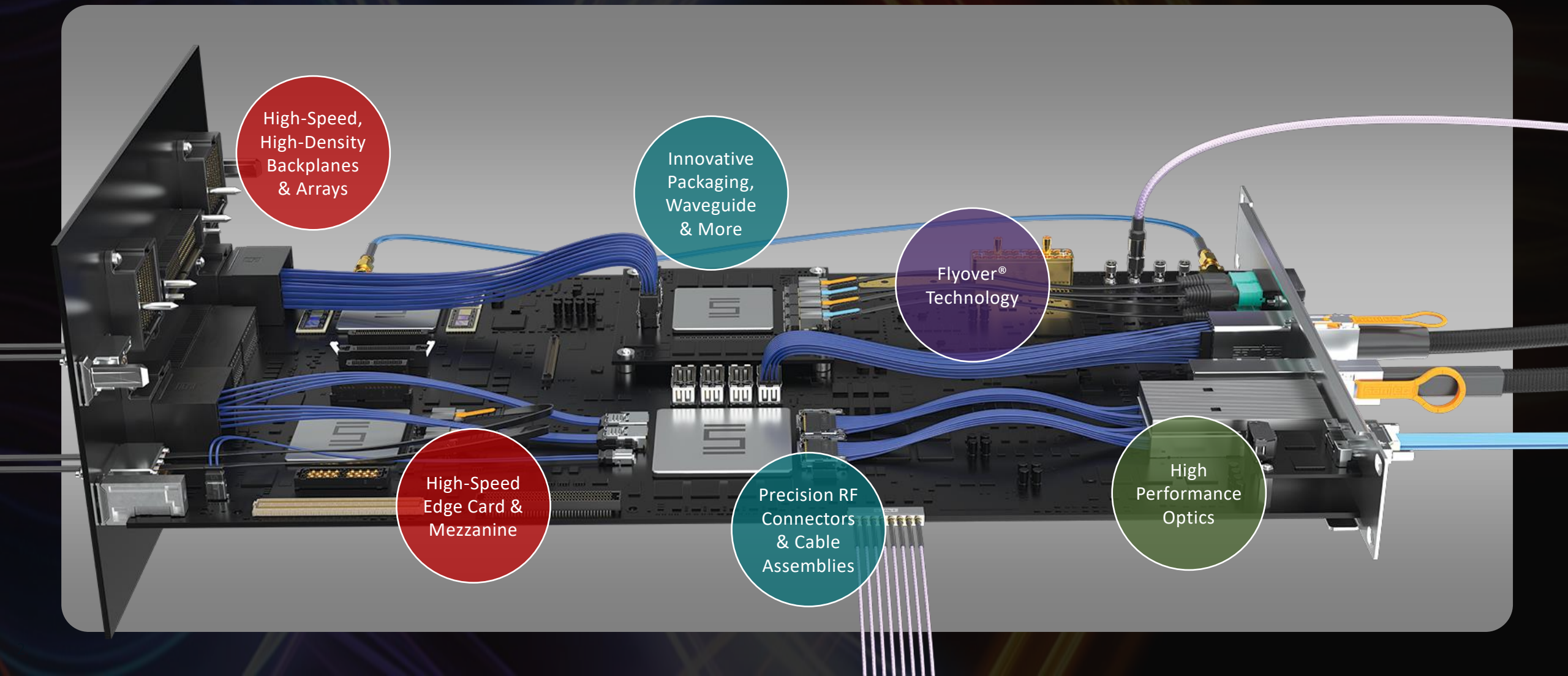

RF Compression Mount Connectors

For more information visit www.samtec.com/**precisionrf**

Swapping Out Solder for Screws

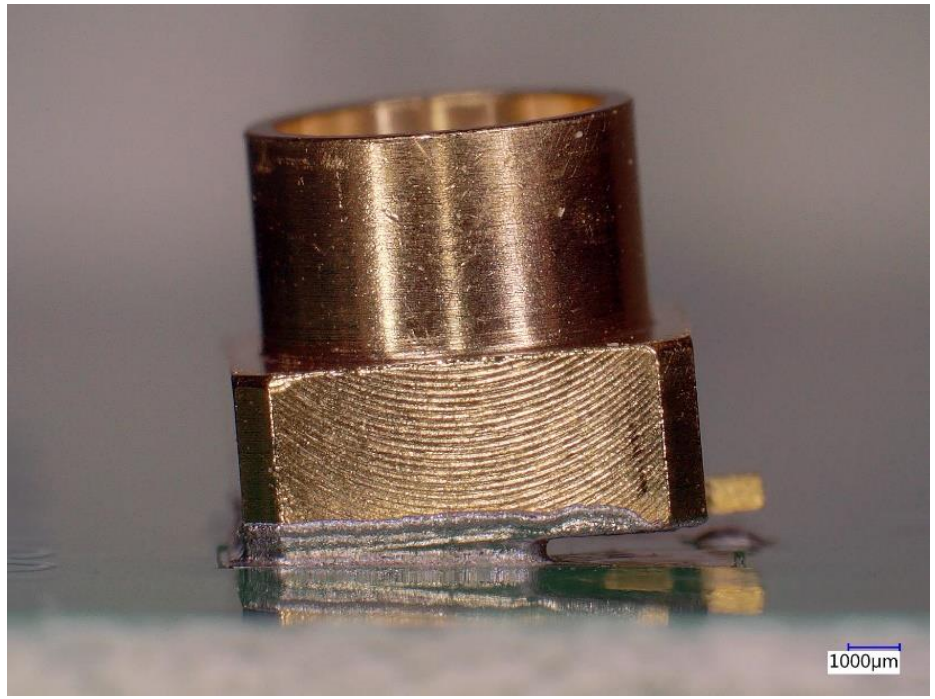

Impacts of Solder Reflow on High Bandwidth RF Connectors

samtec.com/geekspeek

Solderless Compression Mount High Bandwidth RF Connectors

blog.samtec.com/post/what-is-an-rf-launch

Compression Mount Challenges

Pin Compression into PCB

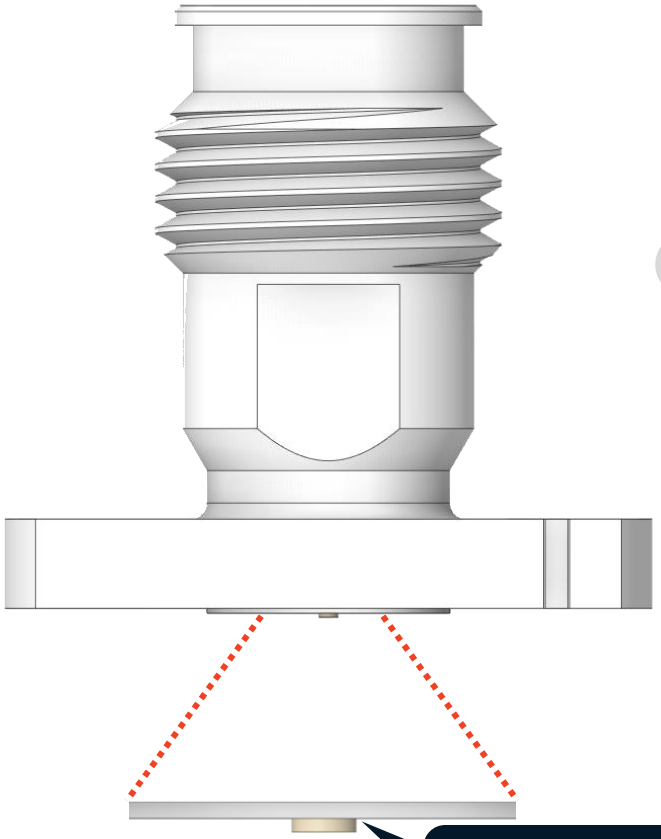

Could the pin push into the PCB pad or dielectric?

Pin Protrudes ≈0.0025” to ensure contact with pad

Blind Pin Alignment on PCB

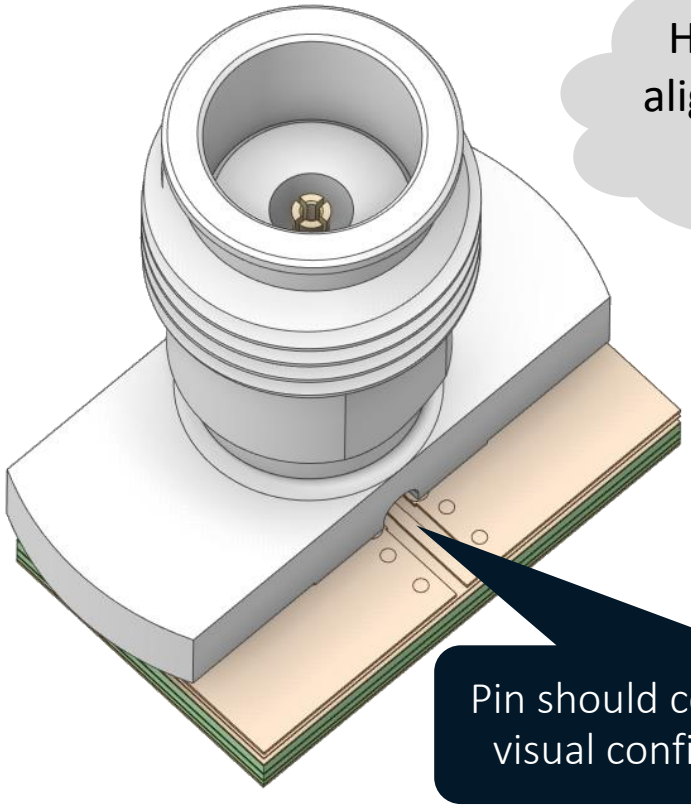

How can I verify alignment if I can’t see the pin?

Pin should contact center of pad but visual confirmation is not possible

Compression Mount Challenges

Pin Compression into PCB

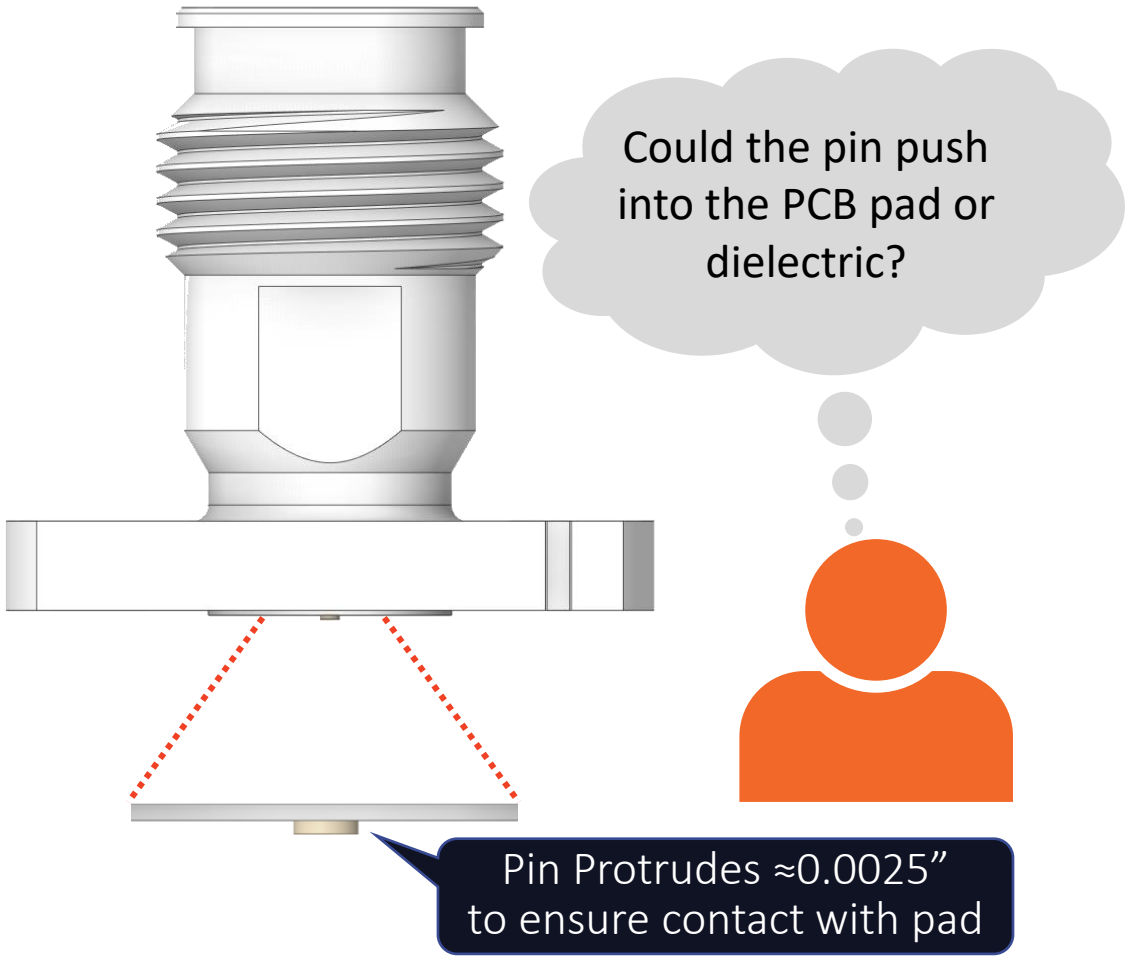

1. What is pin compression and what is the concern?
2. Can we accurately predict mechanical compression and what do we learn?
3. How do we convert a mechanical prediction into an electrical performance prediction?
4. What is the electrical impact of mechanical deformation and what can be done?

Potential Impact to Electrical Performance

Zak Speraw | Samtec, Inc.

What is Pin Compression and What is the **Concern**?

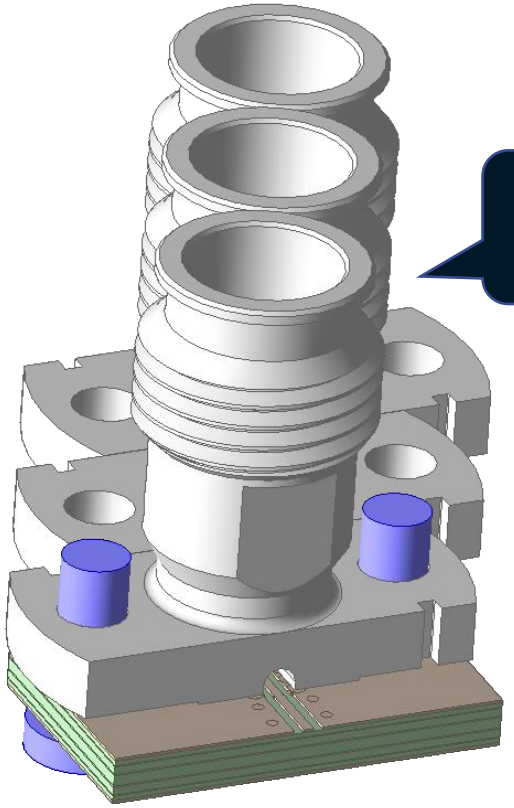

As the connector is lowered and screwed into place

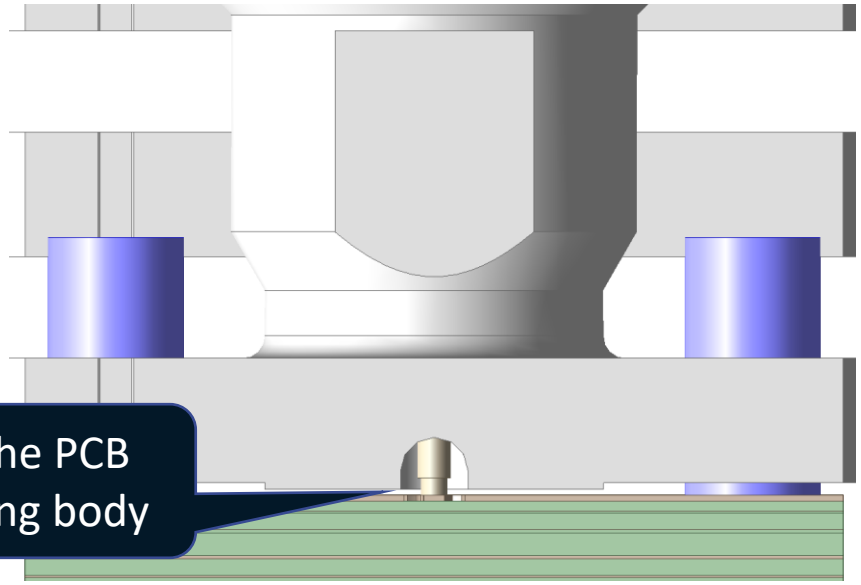

The pin contacts the PCB before the grounding body

What is Pin Compression and What is the **Concern**?

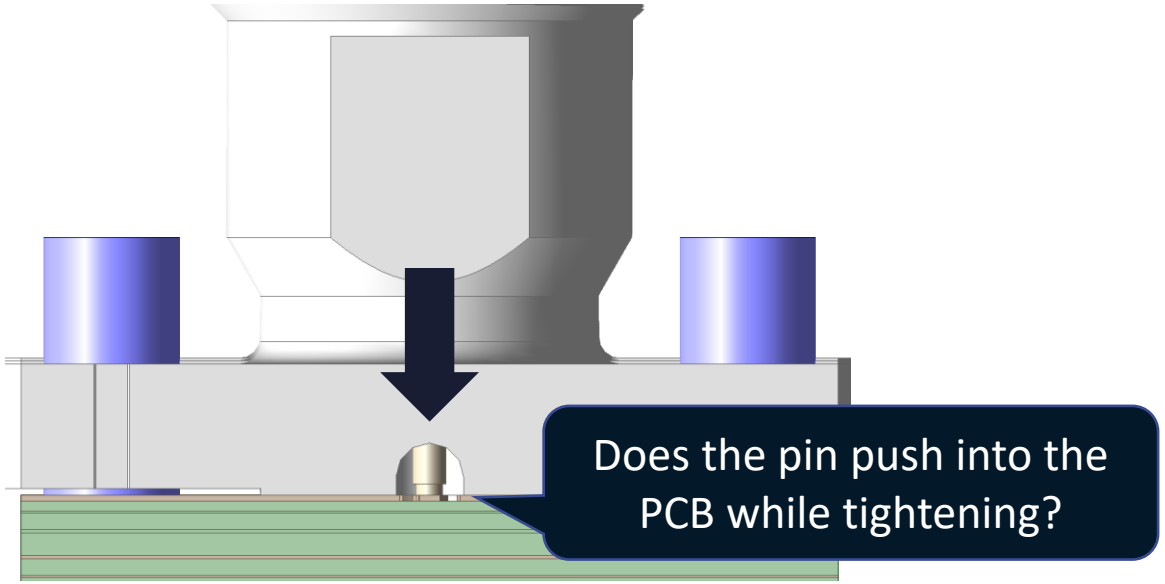

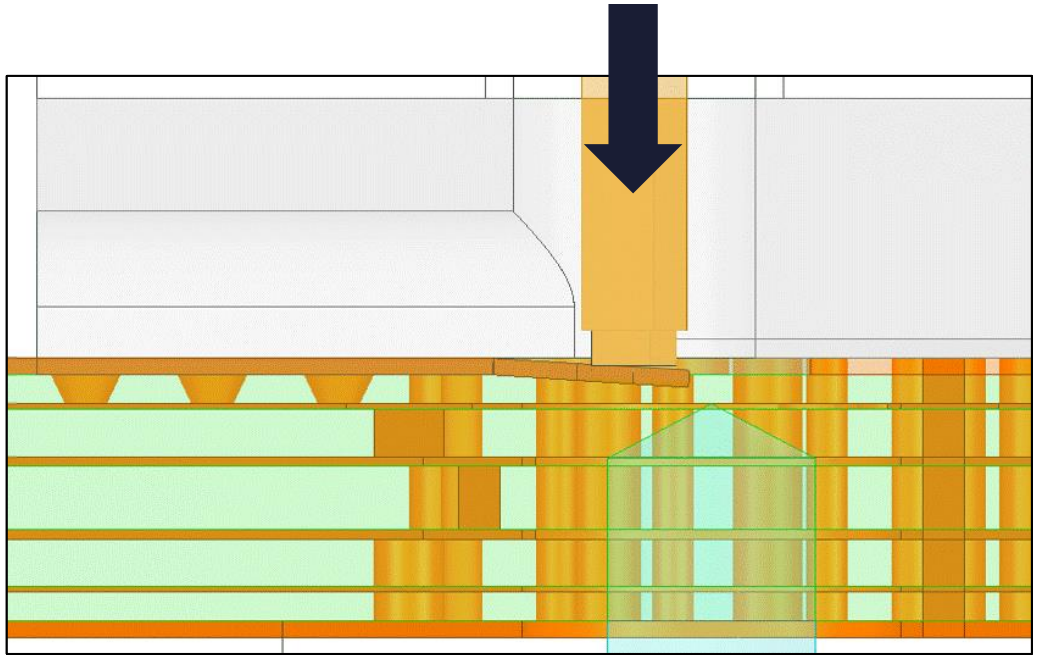

A hypothetical simulation was solved in HFSS to determine possible sensitivity of pin compression

Electrical Performance **is Sensitive** to Pin Compression

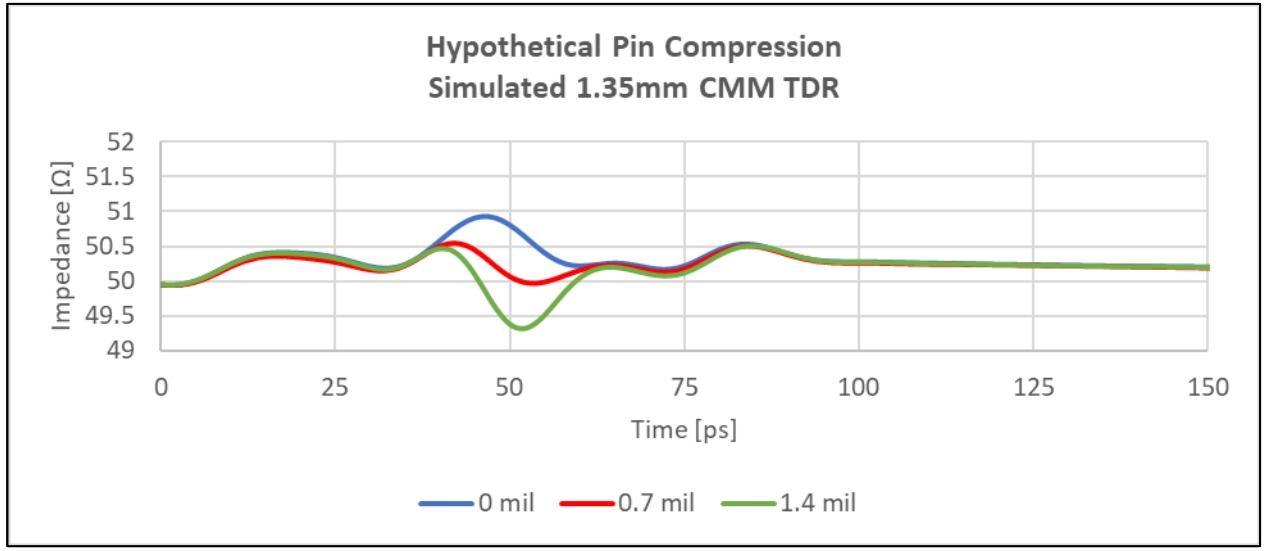

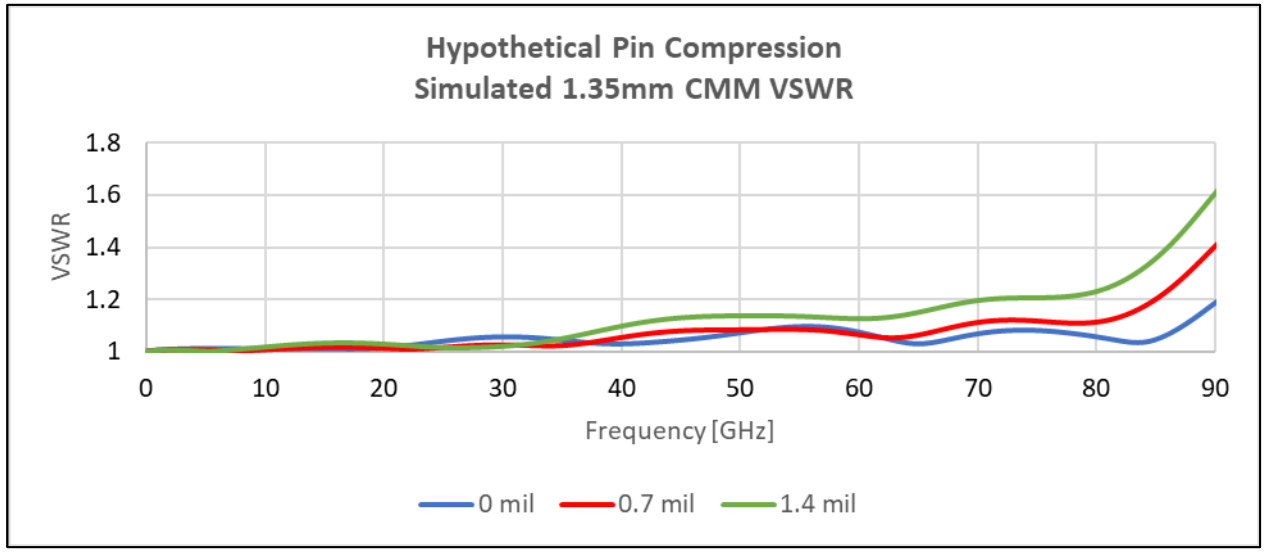

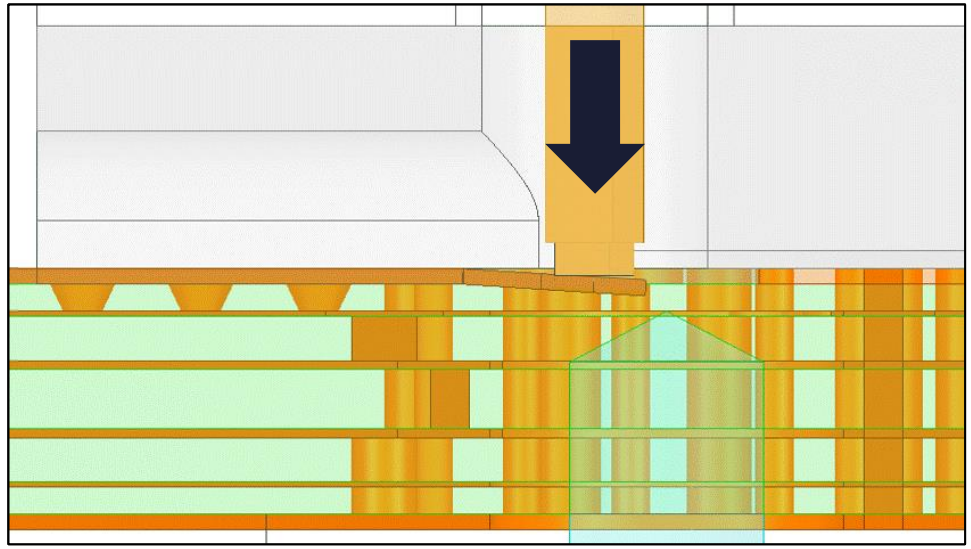

Impedance continues to drop as pad is pressed into dielectric

This is a reasonable concern…
But to what degree does this physically occur?

Section Takeaways

1. If pin compression occurs, it **COULD** negatively impact electrical performance

2. Does pin compression happen and can it be predicted?

Predicting Compression

Edwin Loy | Samtec, Inc.

Mounting Basics

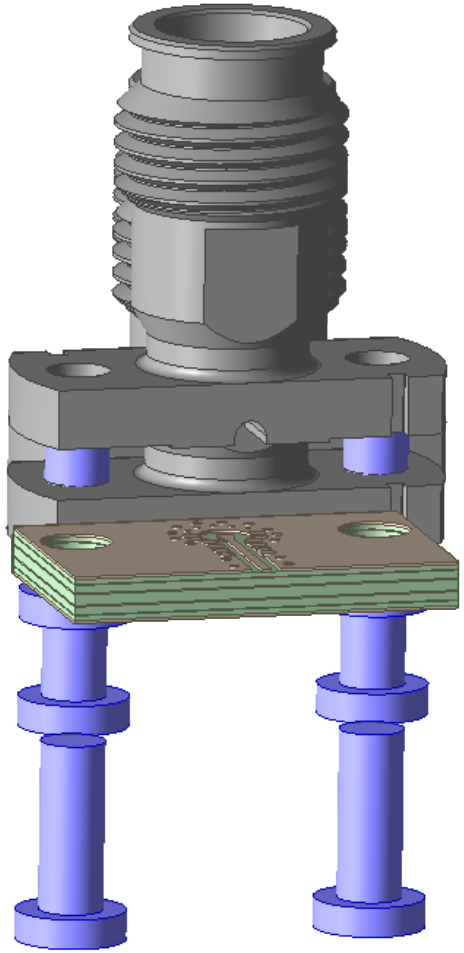

Screws enter the opposite side of the PCB and tighten into the connector body to mount the connector in place

Keep in mind that it’s rotational torque which is translated into axial displacement, so this needs to be quantified

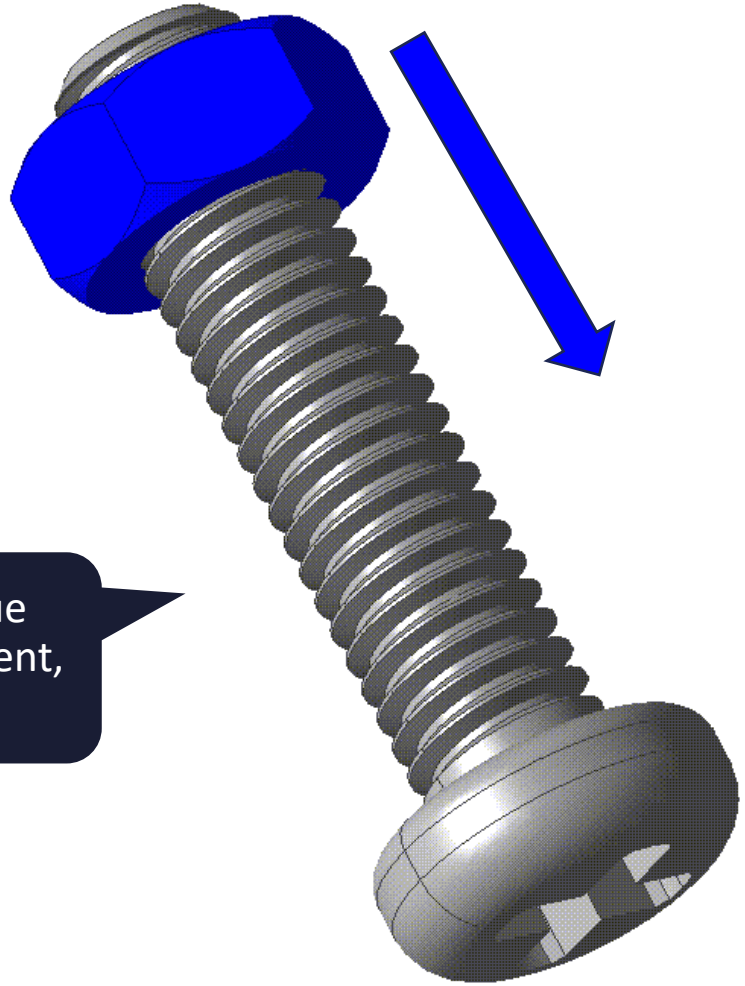

Ansys Mechanical Bolt Pretension

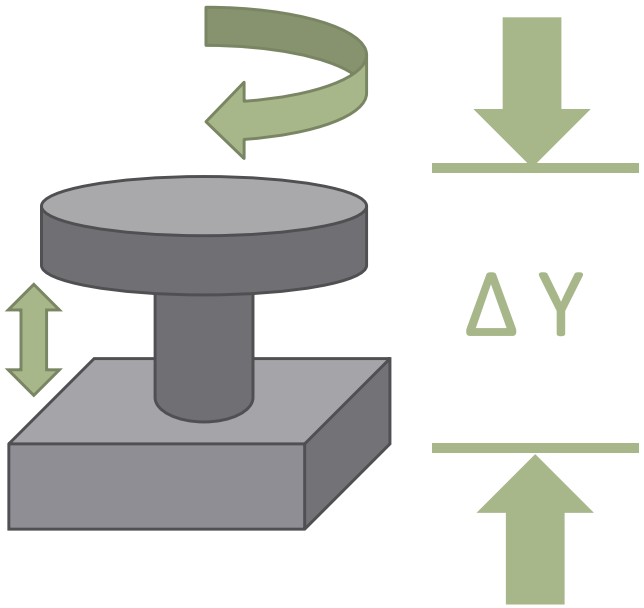

Fixed surface

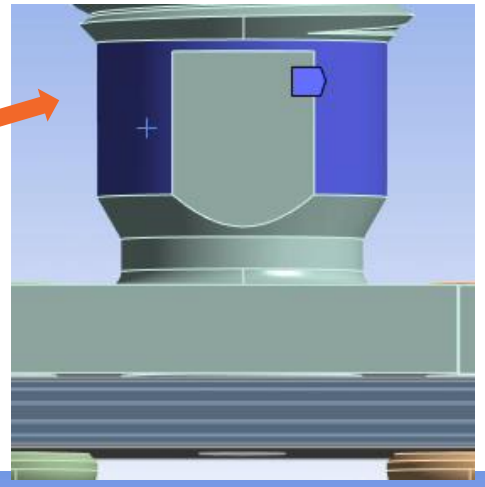

Torque derived Screw
"Axial Shrinkage"

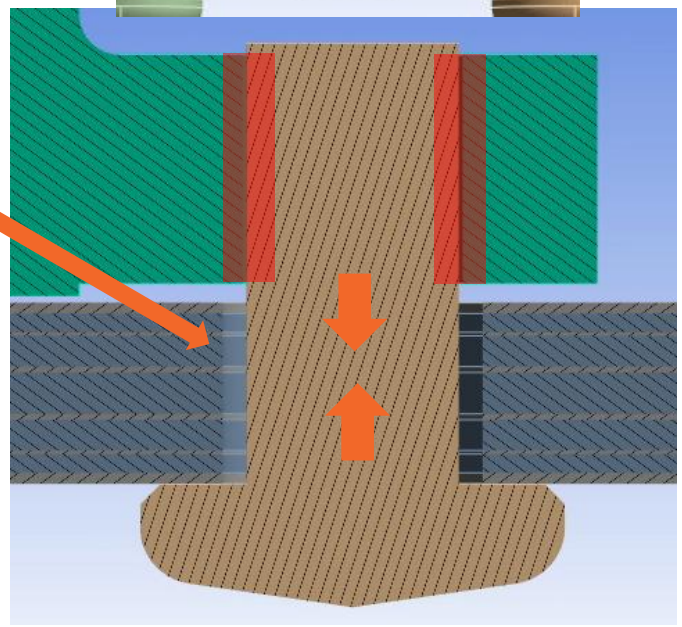

The NOTES of the connector print for assembly state:
RECOMMEND MOUNTING TORQUE **0.5 – 0.8 INCH POUNDS**

$$F = \frac{T}{Kd} = \frac{\mathbf{0.6\ in - lbs}\ (1\ \mathrm{Nm}/8.8507\ \mathrm{in - lbs})}{0.2 * 0.00132\ \mathrm{m}} = 257\mathrm{N}$$

Exploration of Results

Exaggerated Deformation Display

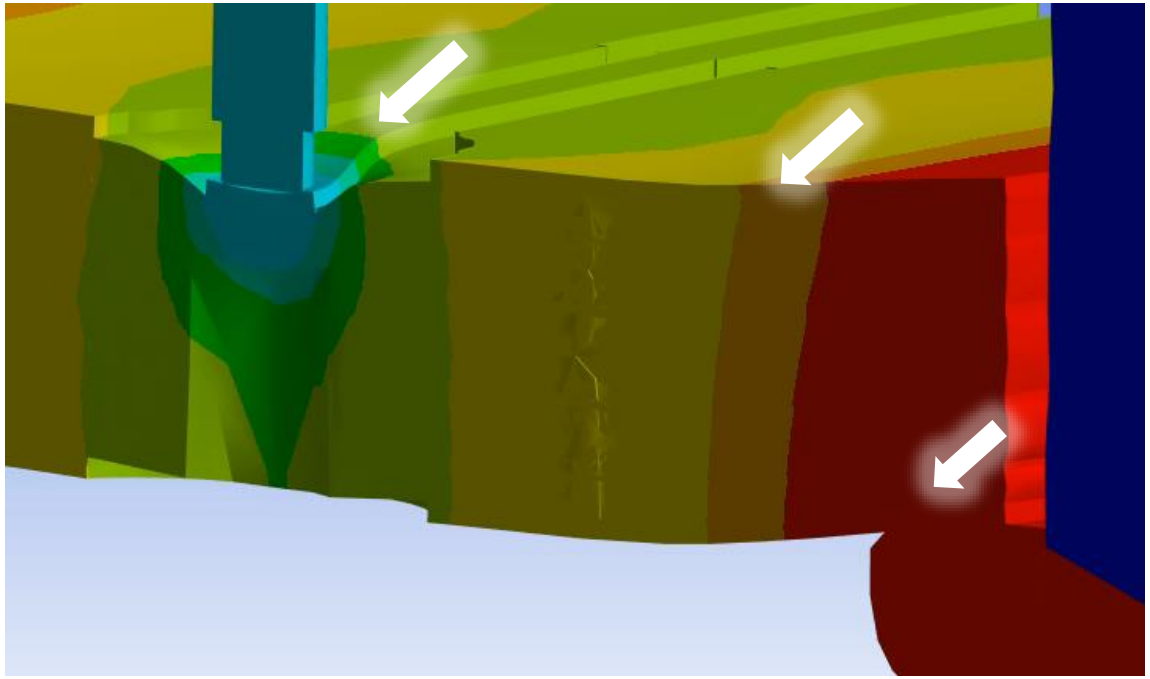

Nominal Deformation Display

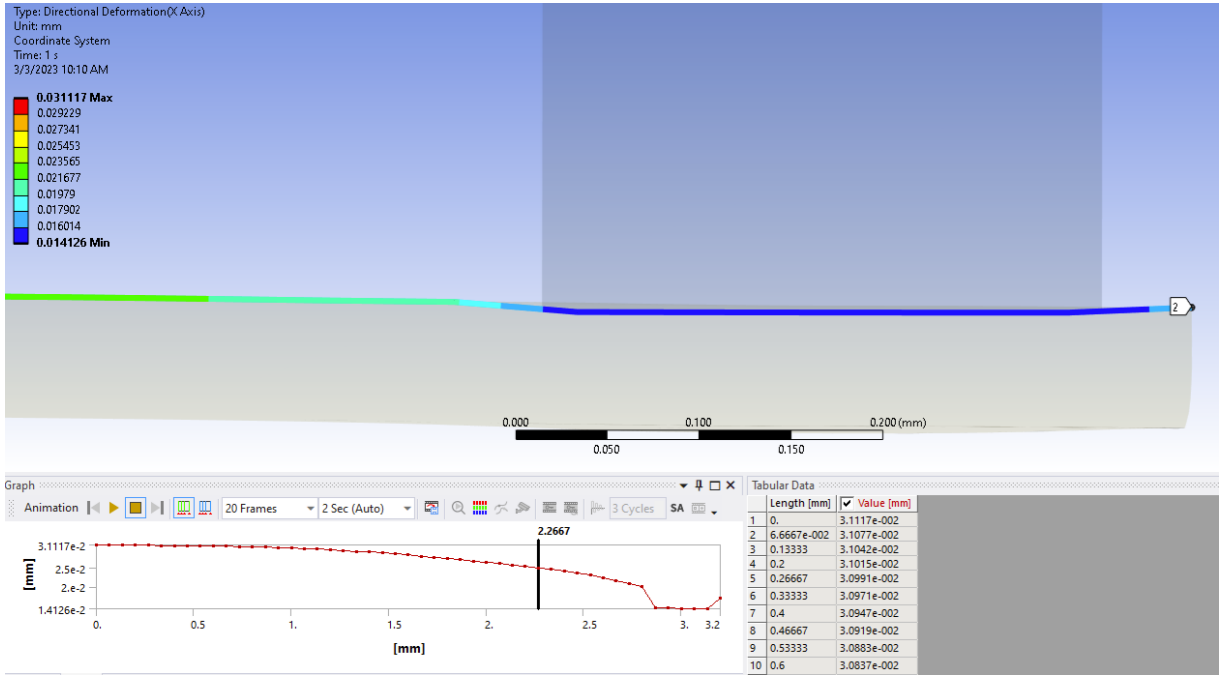

Exaggerated Deformation Display of Trace

Cross Section Image of Actual Trace

Correlation of Results

Nominal Deformation Display

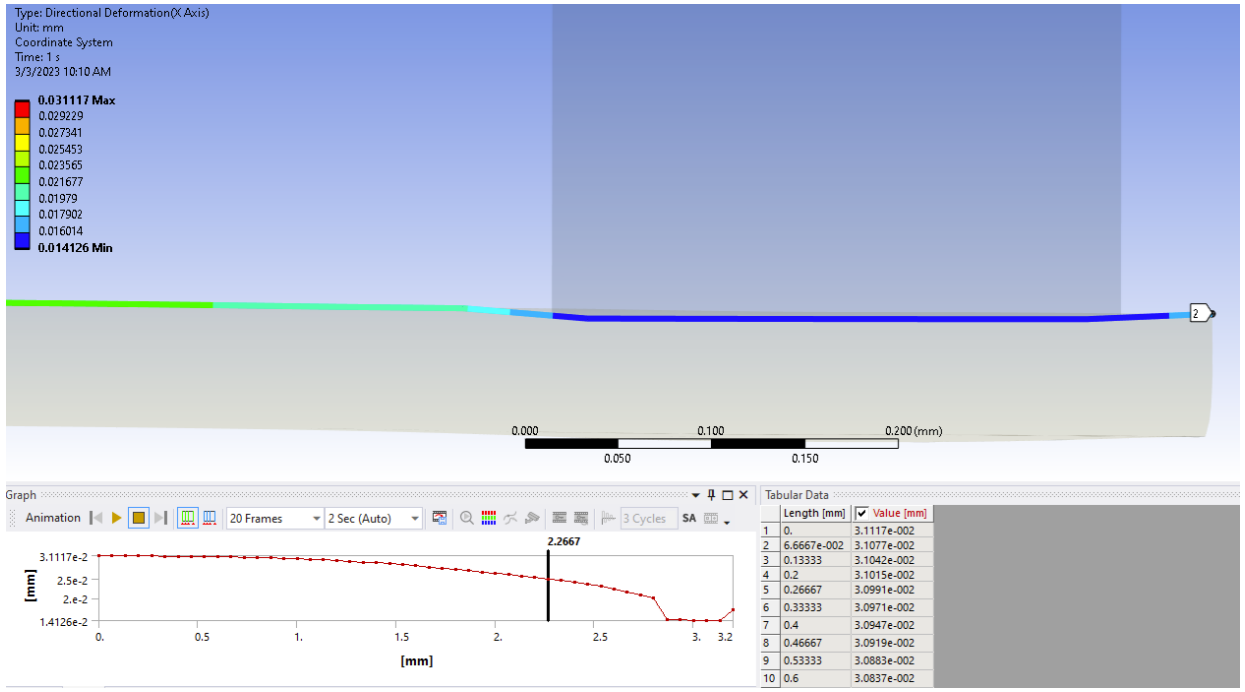

Cross Section Image of Actual Trace

Simulation results agreed with physical images

0.6 in-lb. Case Results

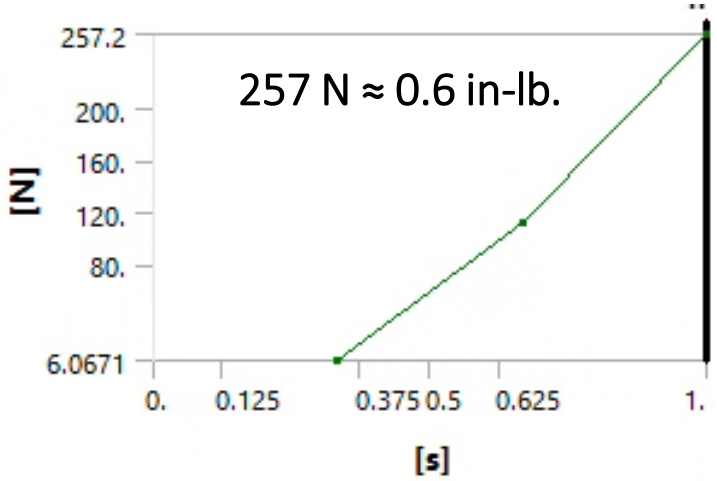

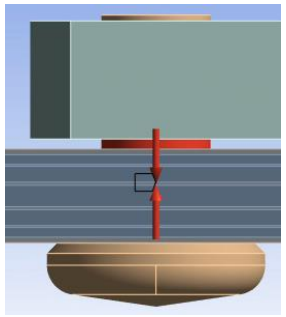

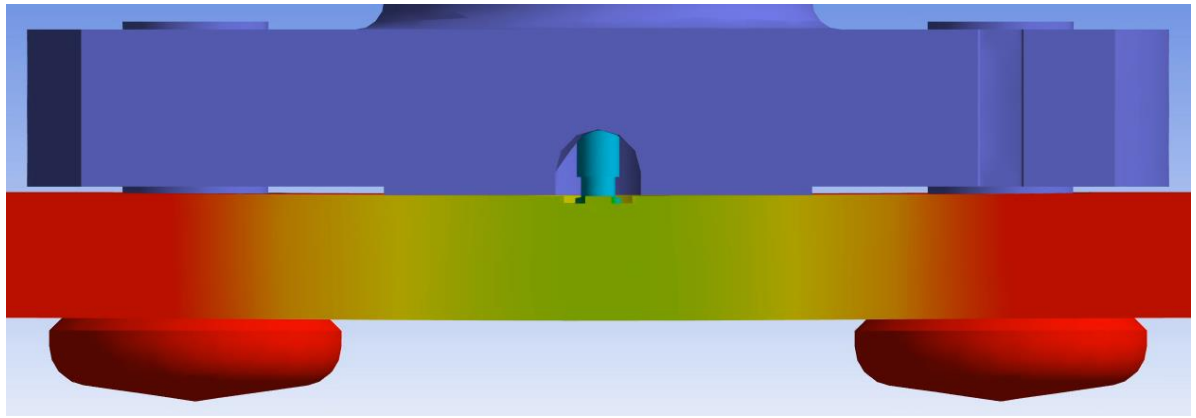

Minimal Pin Compression and PCB Flex with nominal 0.6 in-lbs

Notable Results

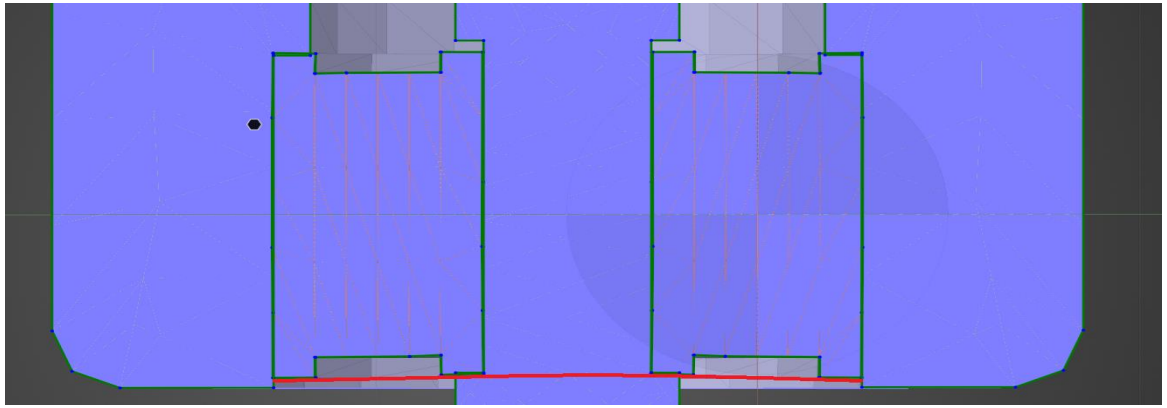

Note that the simulation showed pin and bead displaced and flexed away from PCB respectively

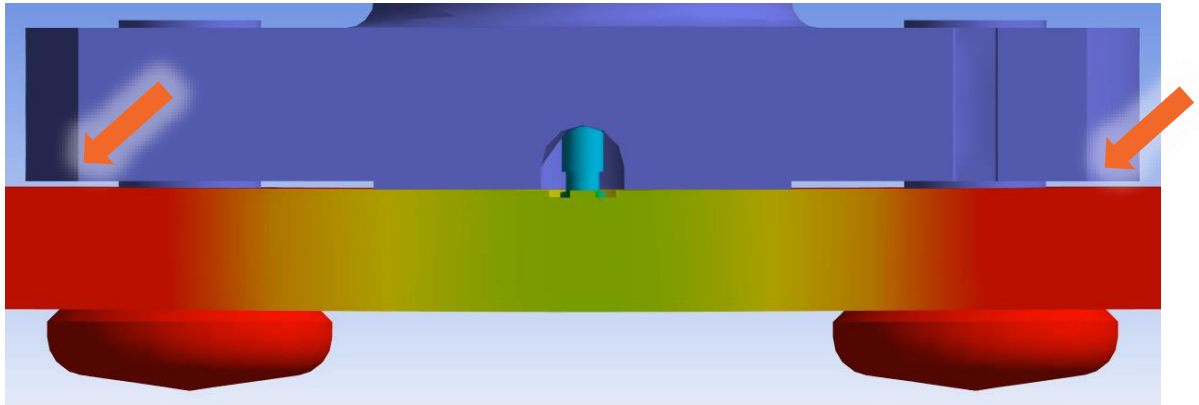

Note the minimal deformation around the bolts as compared with the center pin

Copper Pad Deformation, Center Contact Displacement, and Bead Flexure all mitigate the risk of pin compression into the PCB

What If…

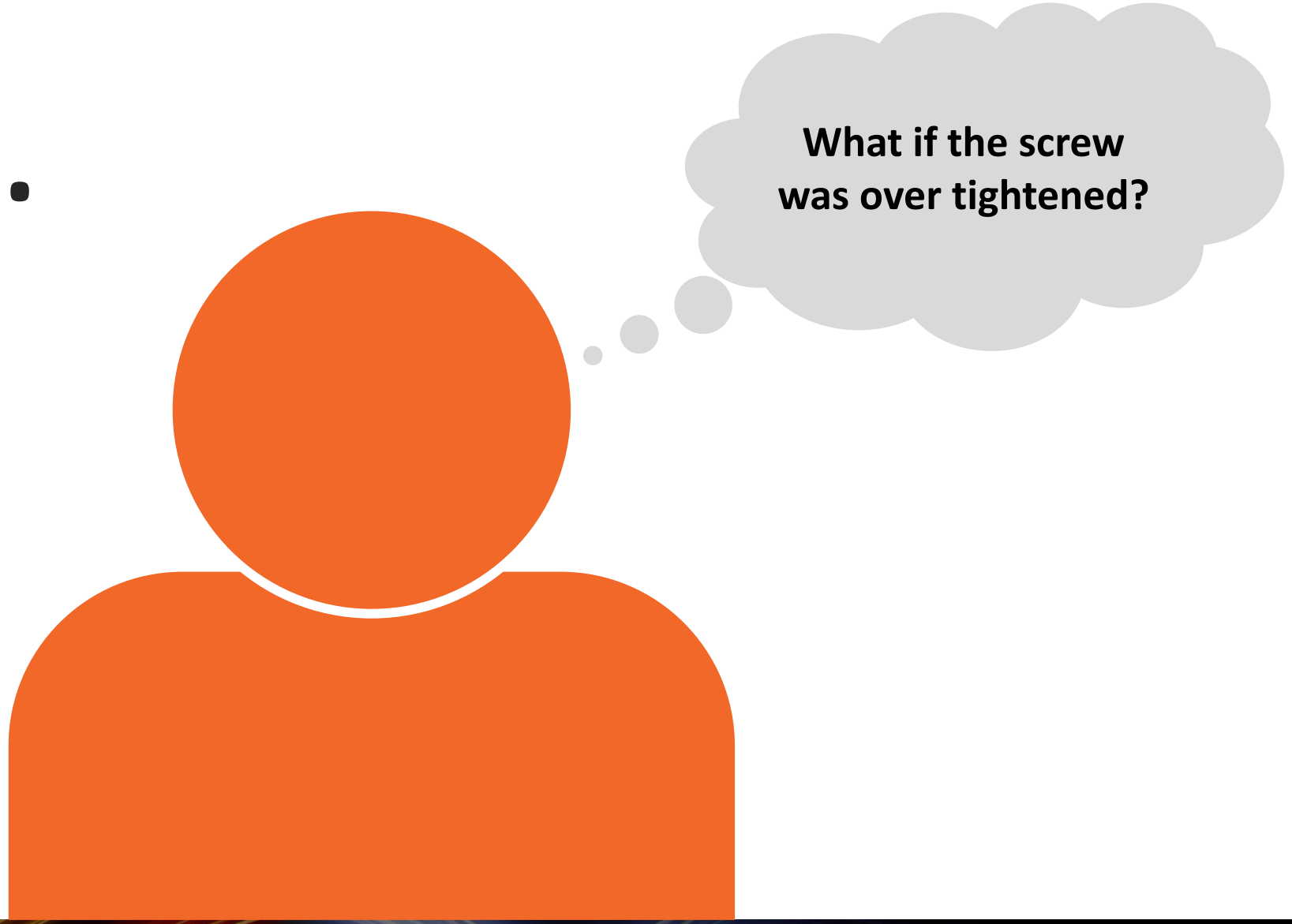

0.9 in-lb. Case Results

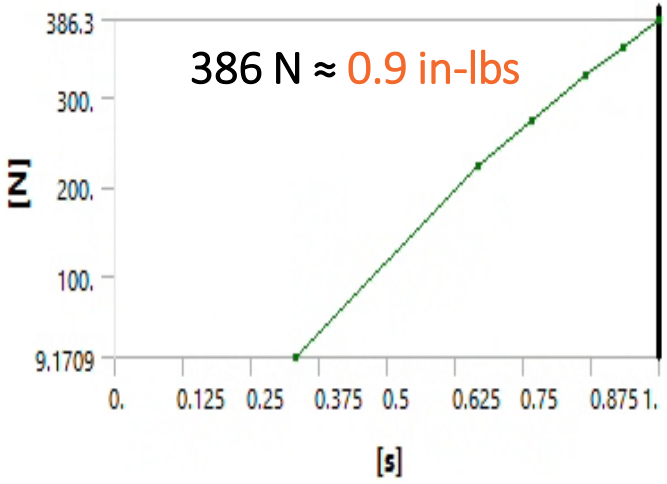

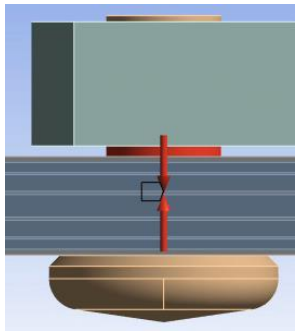

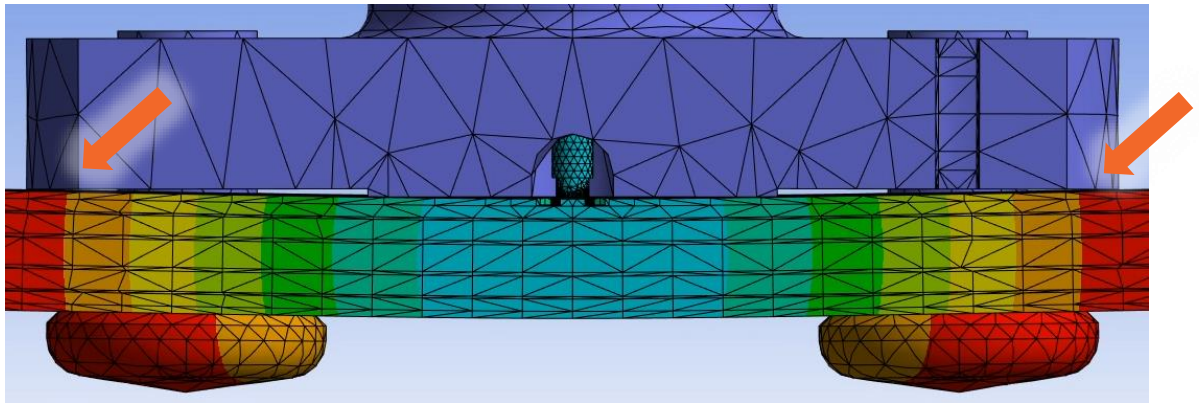

PCB WARPS before pad compresses!

What If…

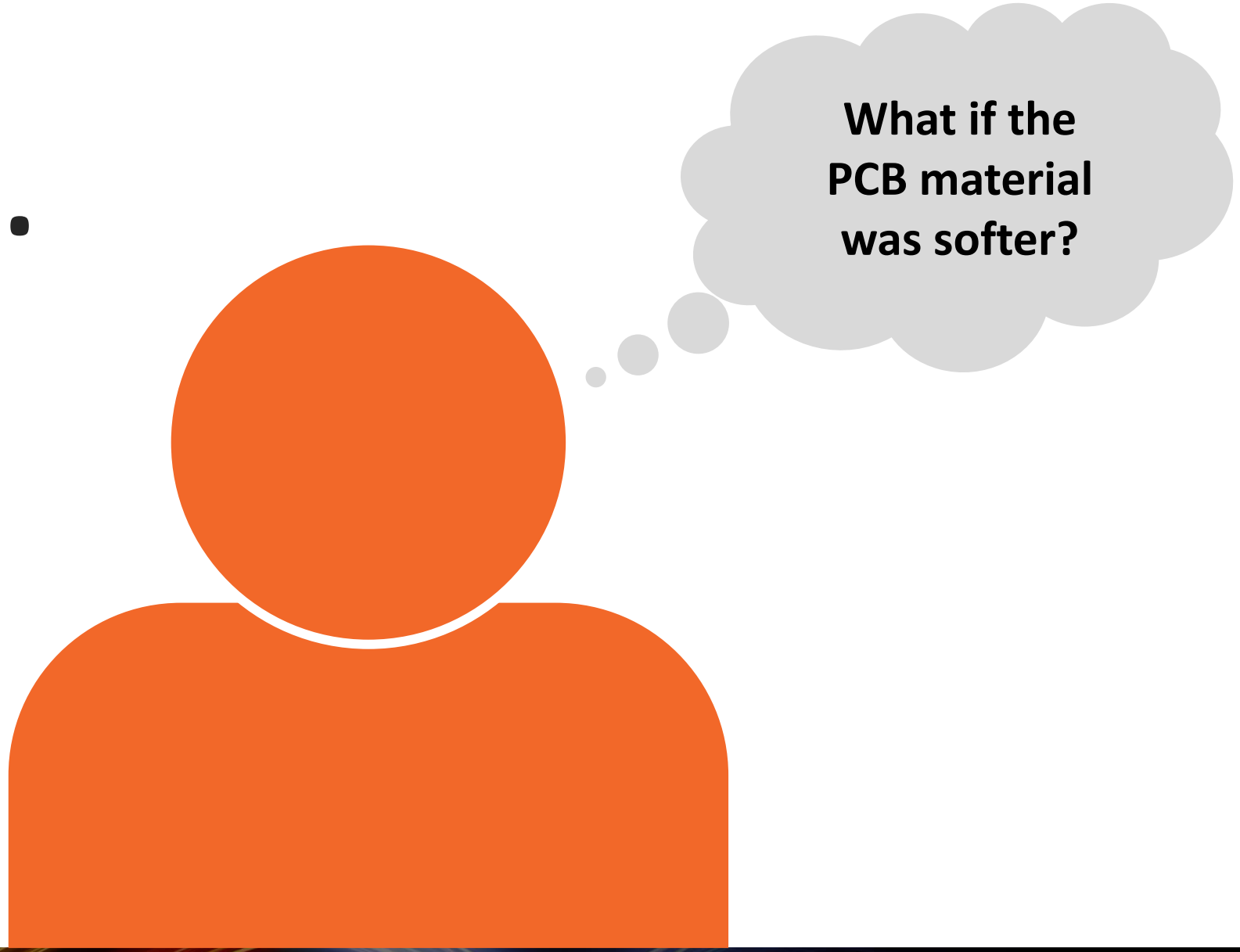

PTFE Dielectric Results

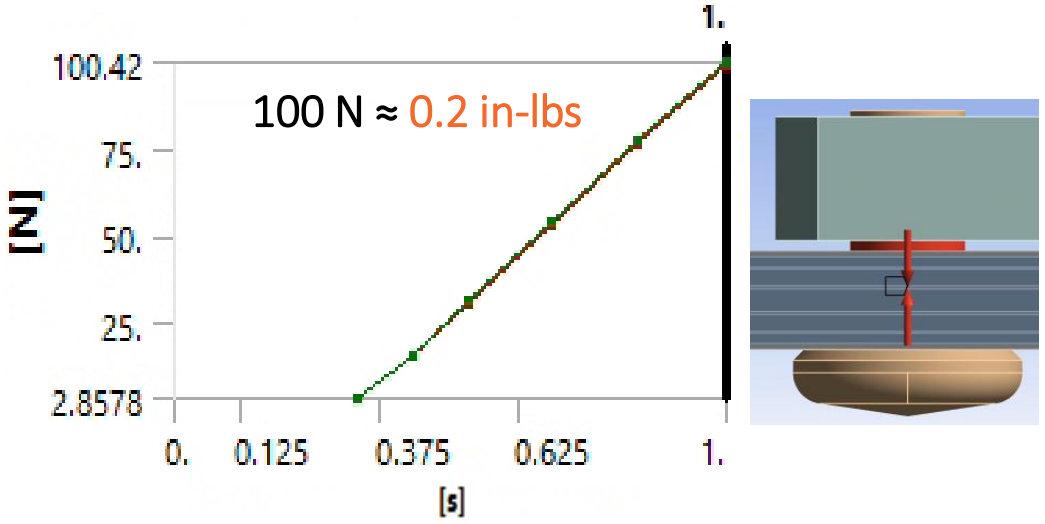

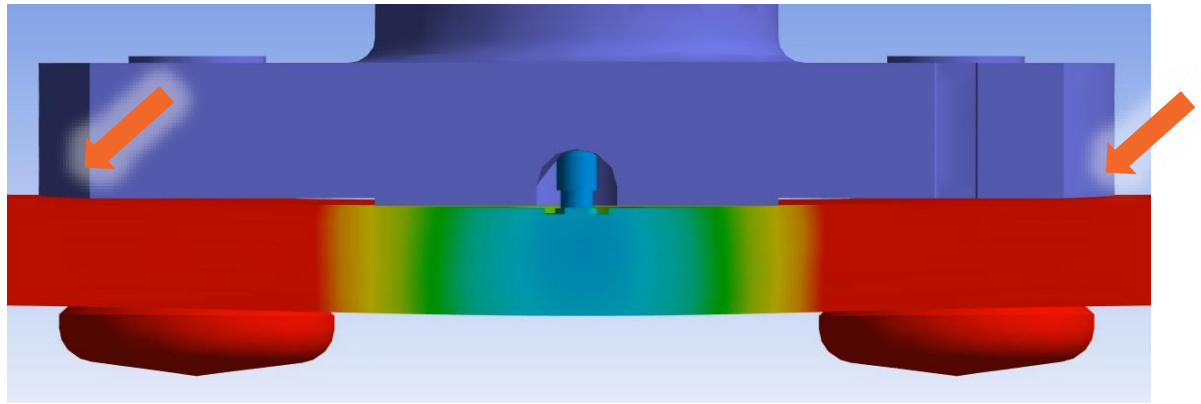

PCB WARPS before pad compresses!

Below minimum torque!

Qualitative Correlation

- Similar product example of PCB warping with over-torque

- Side part contact is indicator of "over compression"

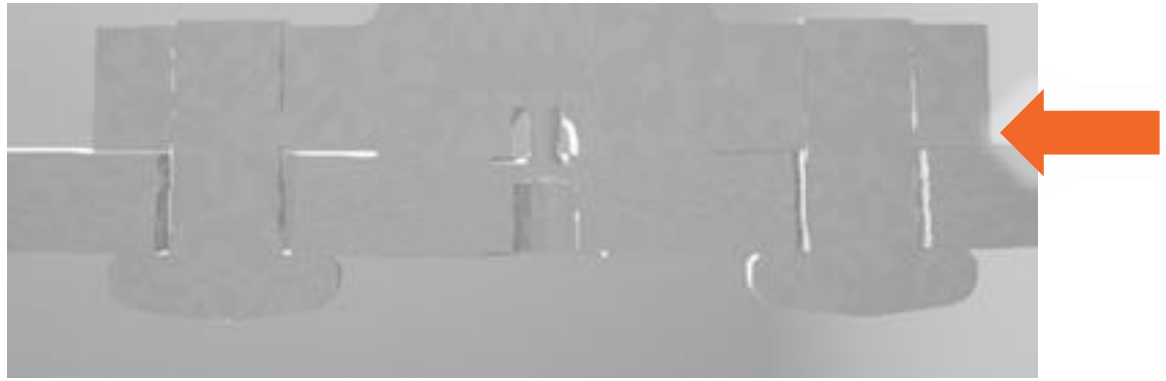

TIP: Inspect for board warpage by looking for board to body contact along the outer edges of the connector

Section Takeaways

- Mechanical Simulation agreed with physical images
- Pin compression was minimal with our PCB stack up and recommended torque
- Board warpage is a factor of concern, perhaps more than pin compression
- Recommend checking gaps for PCB warpage control

Preparing Mechanical Results for Electrical Simulation

Sage Wronowski | Samtec, Inc.

From Mechanical to HFSS

The output of mechanical sim is exported as an STL

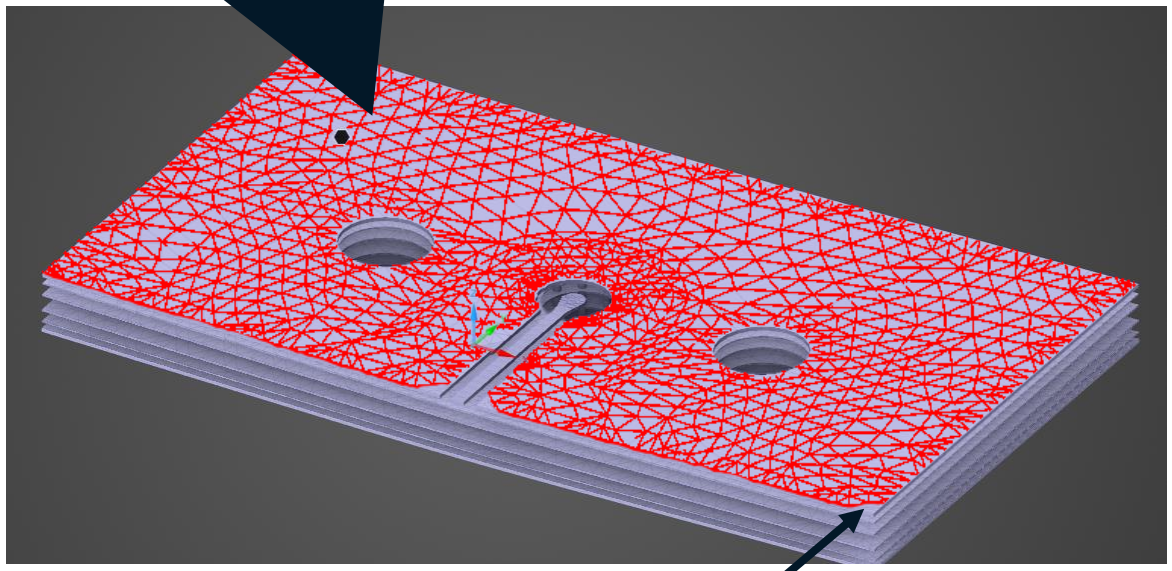

Notice the “faceted” segments

The goal is to convert the STL into something more suited for EM simulation **without removing deformed details**

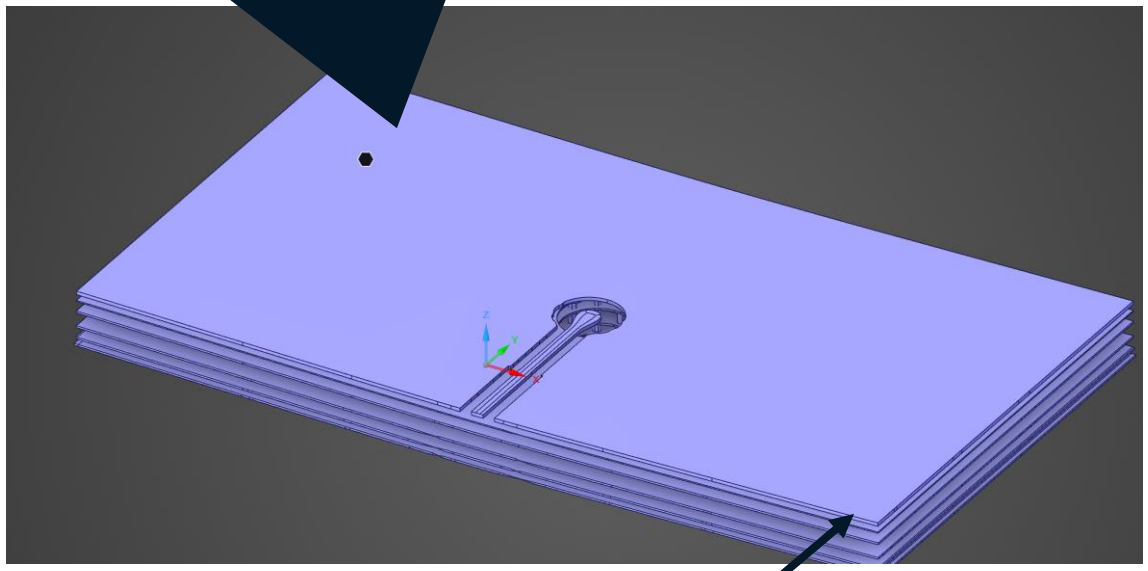

Notice smooth without facets

What are STL Files and Why Should We Convert?

The STL represents the surface mesh from mechanical simulation as a series of facets

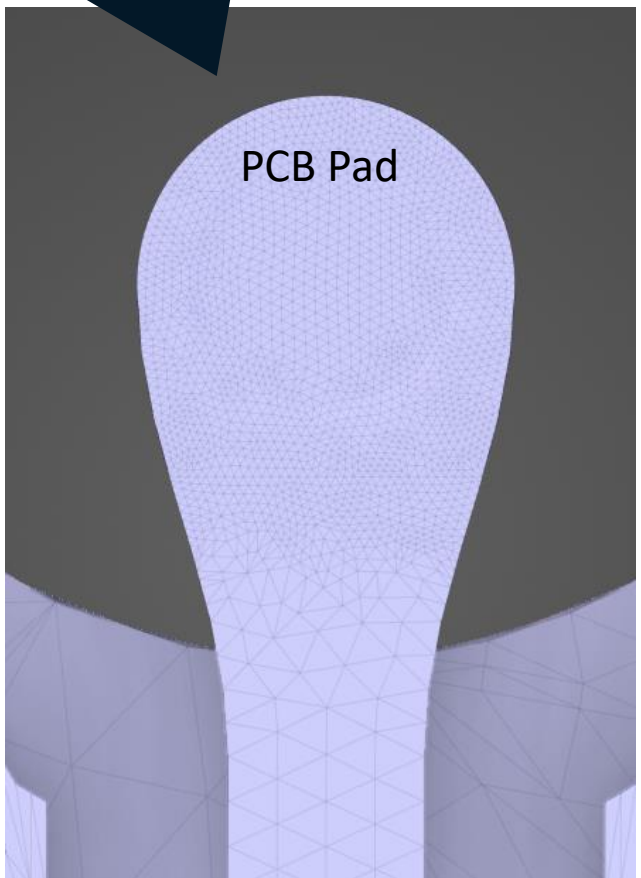

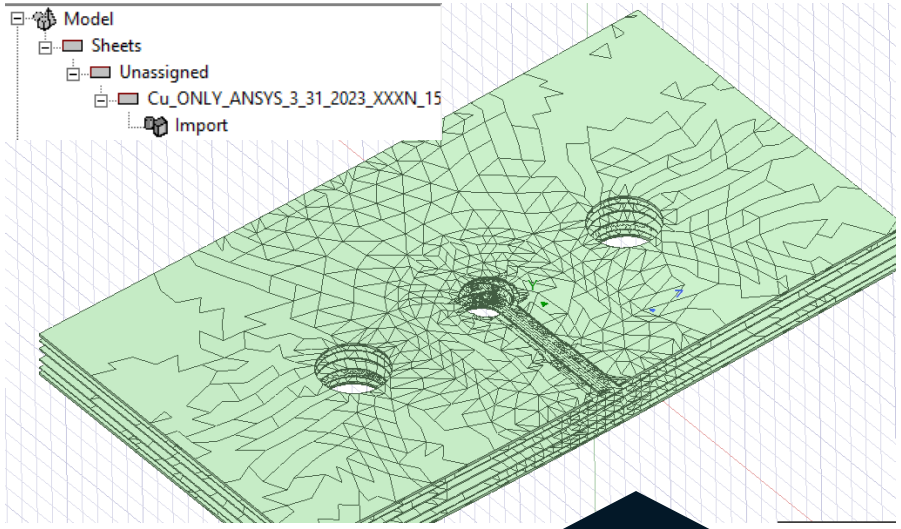

It's possible to import STL into HFSS but we need solids for our case

STL_Import	4/5/2023 12:13 PM	Ansys Electronics ...	71,690 KB

Worse, a seemingly "small" model is actually a 70 MB file!

Direct Conversion to Solid

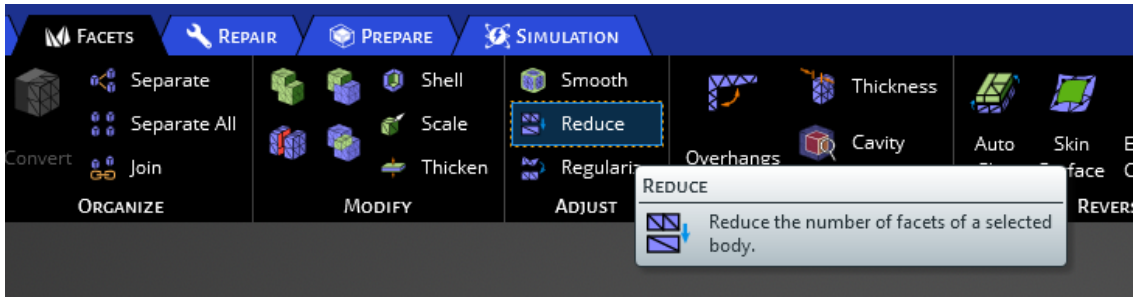

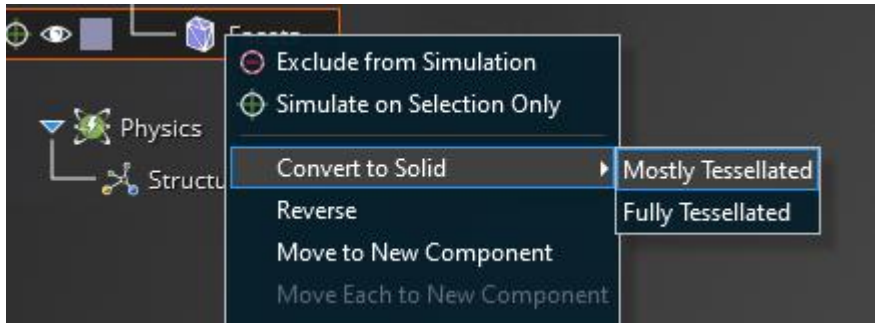

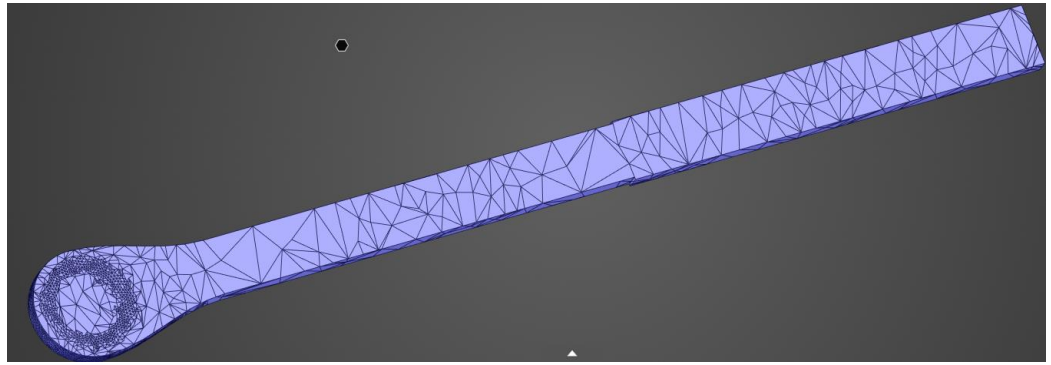

For the copper only sections
the STP file is already over 152MB!

Cu_only_Solidified.dsco.stp	4/3/2023 2:11 PM	STP File	152,031 KB

Discovery “Fit Spline” Tool

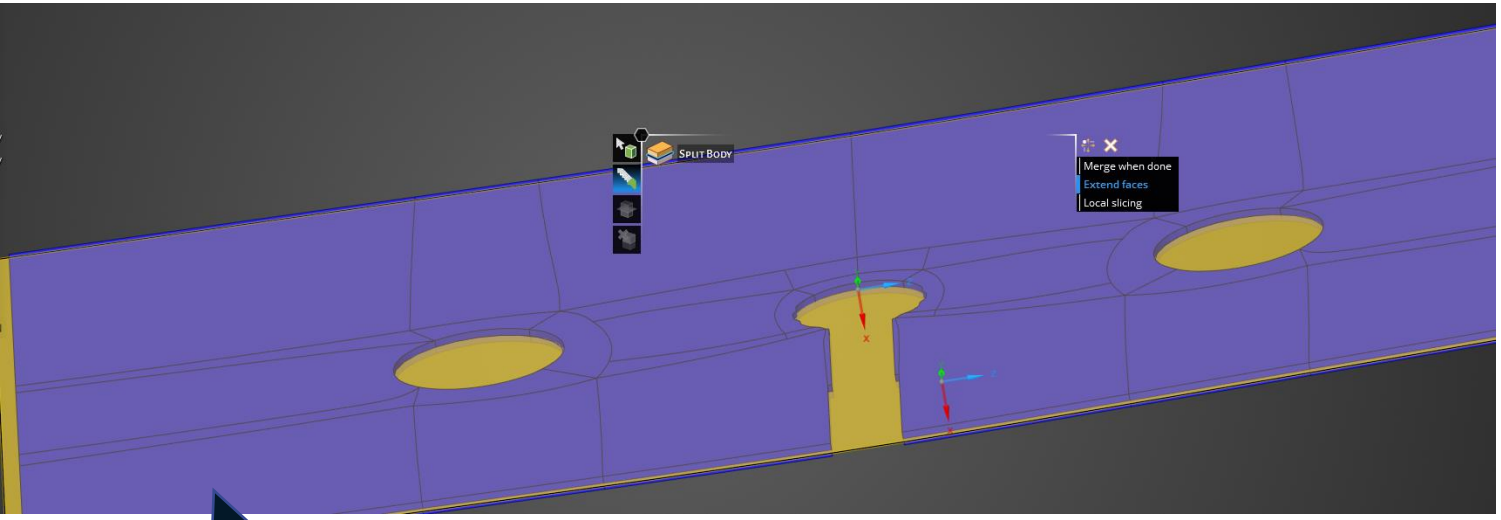

Autoskin is used for the top, then the faces are thickened towards the bottom

Fit spline is then used on the bottom of the top layer to use as a cut plane

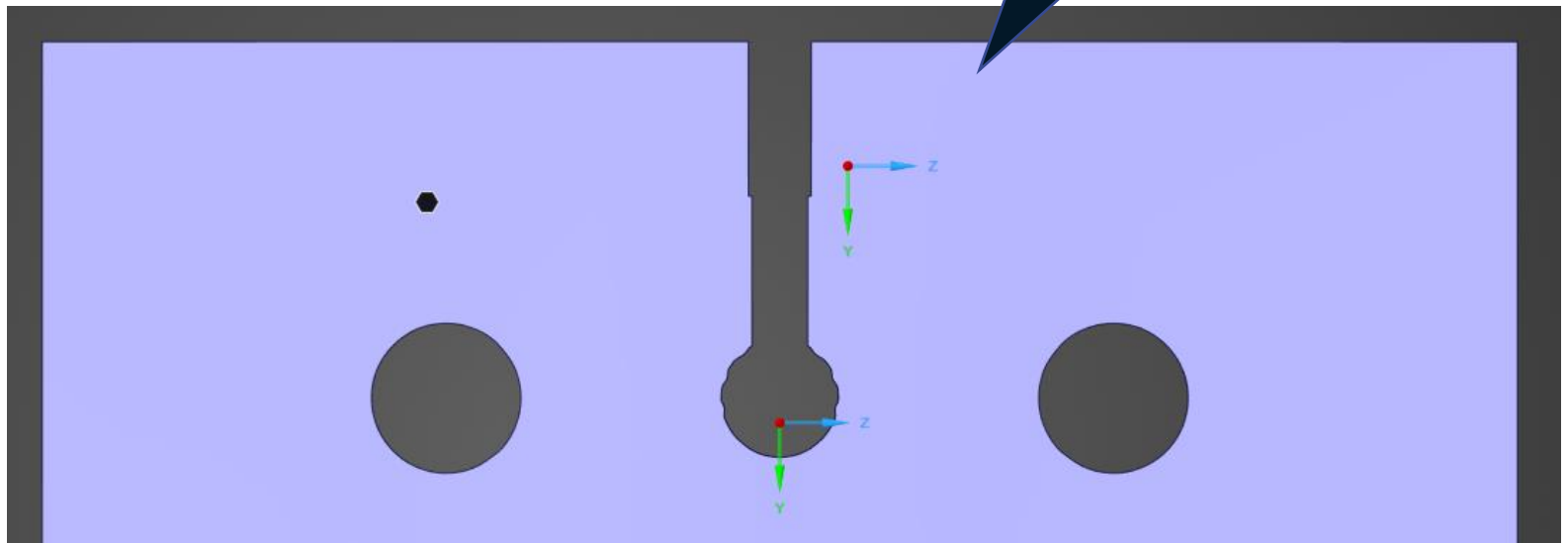

File Size Comparison

- The resulting faceted, and splined files were saved as STEP files for import into HFSS

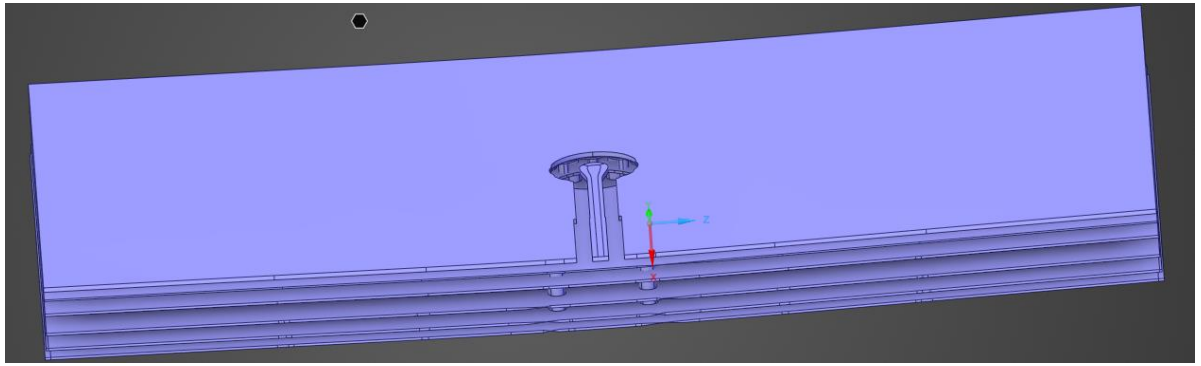

STP File	33,263 KB

Notice the “clean” splined model file size was **5x smaller**

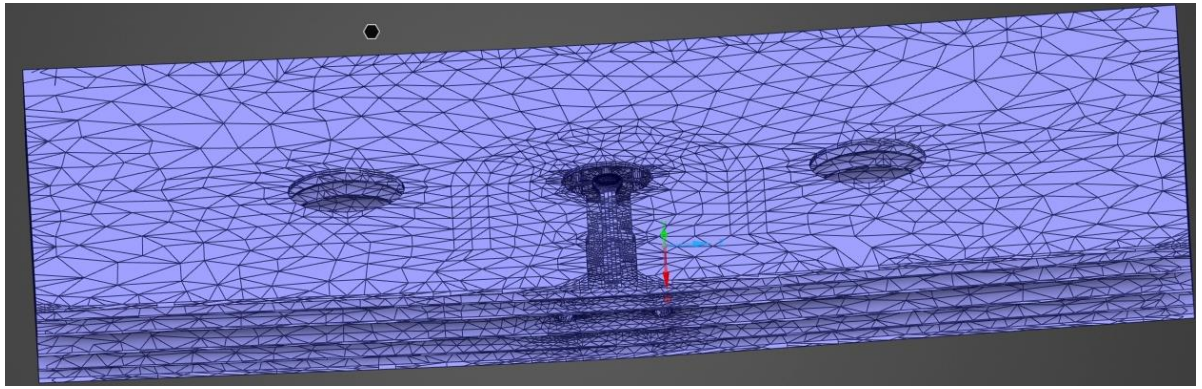

STP File	152,031 KB

Deformed Connector Geometry

Mechanical simulation identified bead deformation, allowing pin to displace away from PCB pad

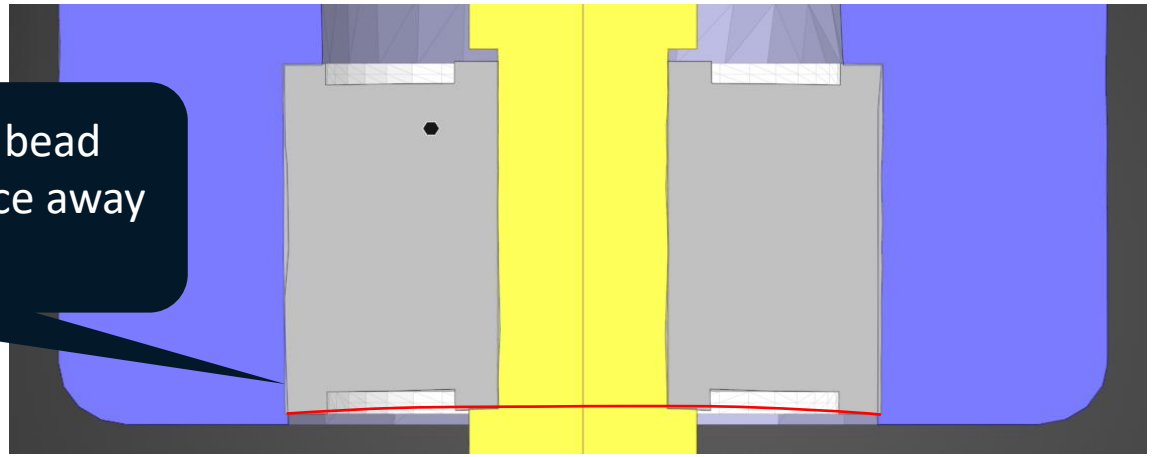

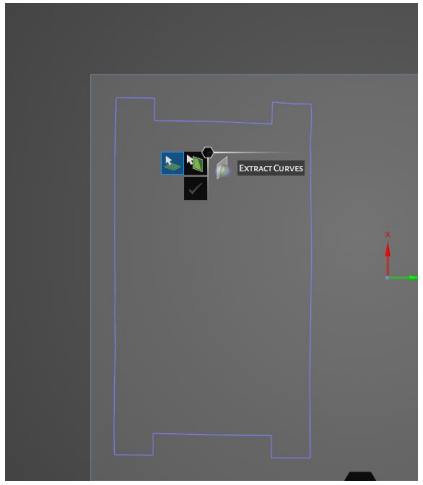

Extract Curves

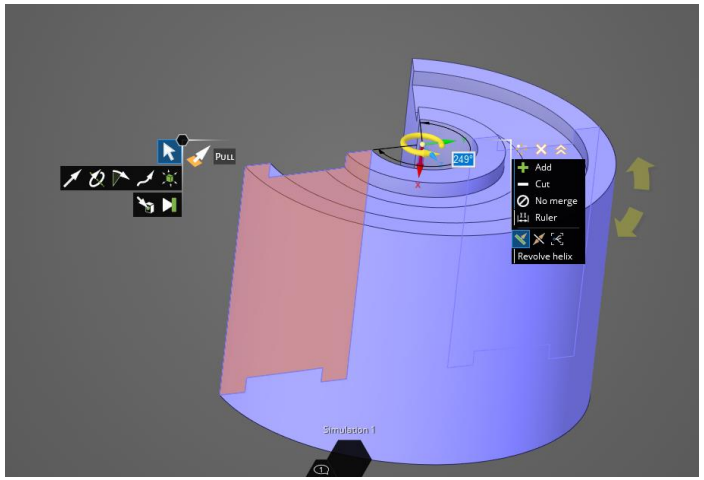

Pull Tool

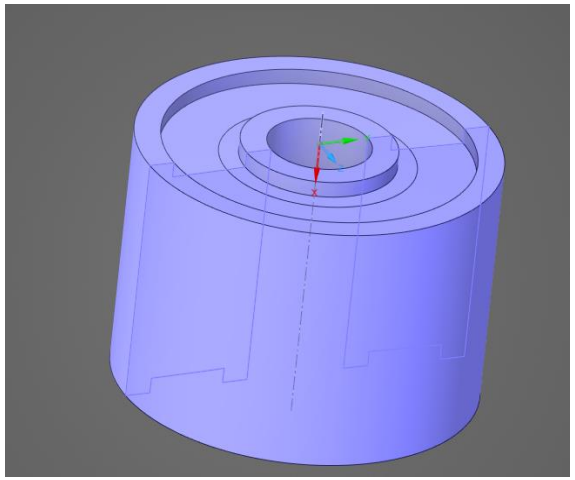

Solid Object created

Checking the Fit

Color coded fit compares deviation between original and “cleaned” geometry

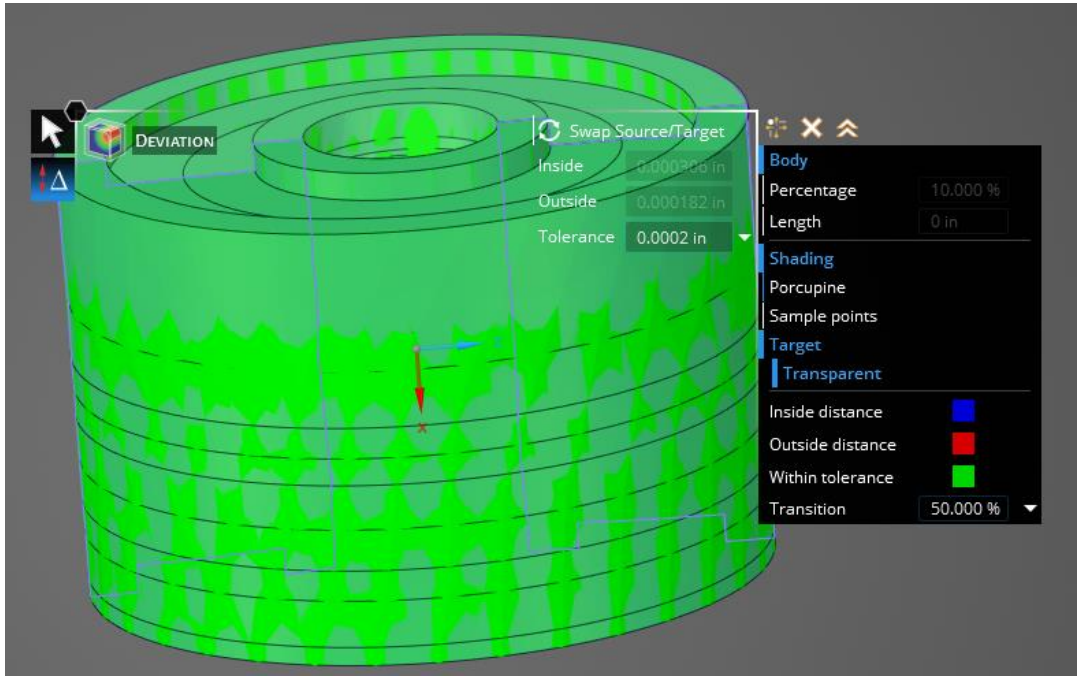

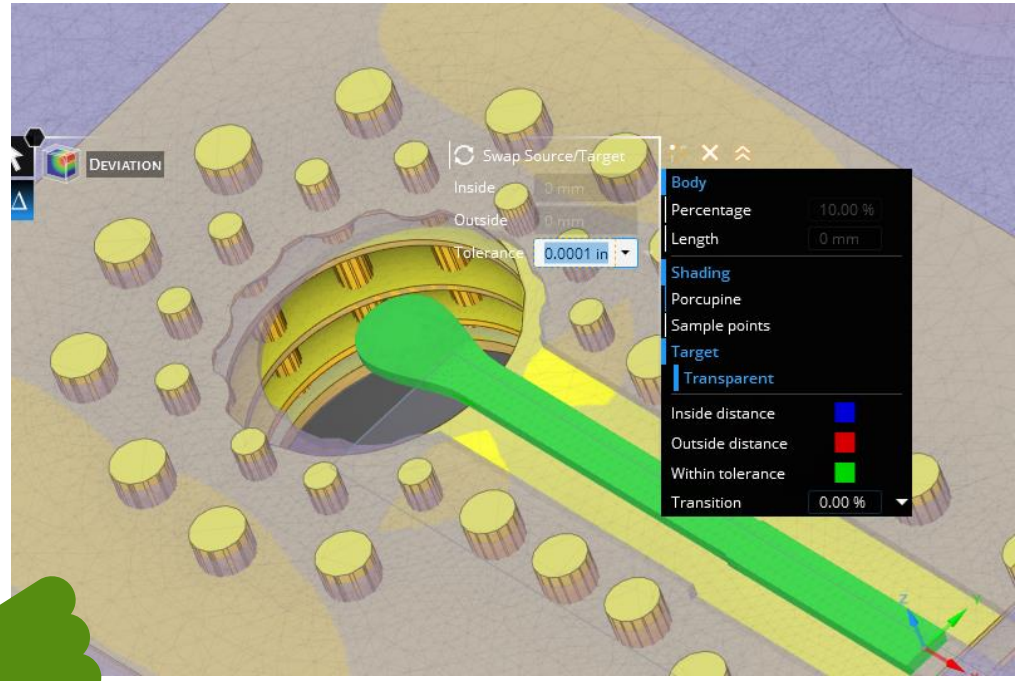

Faceted Model vs “Cleaned” Model Comparison

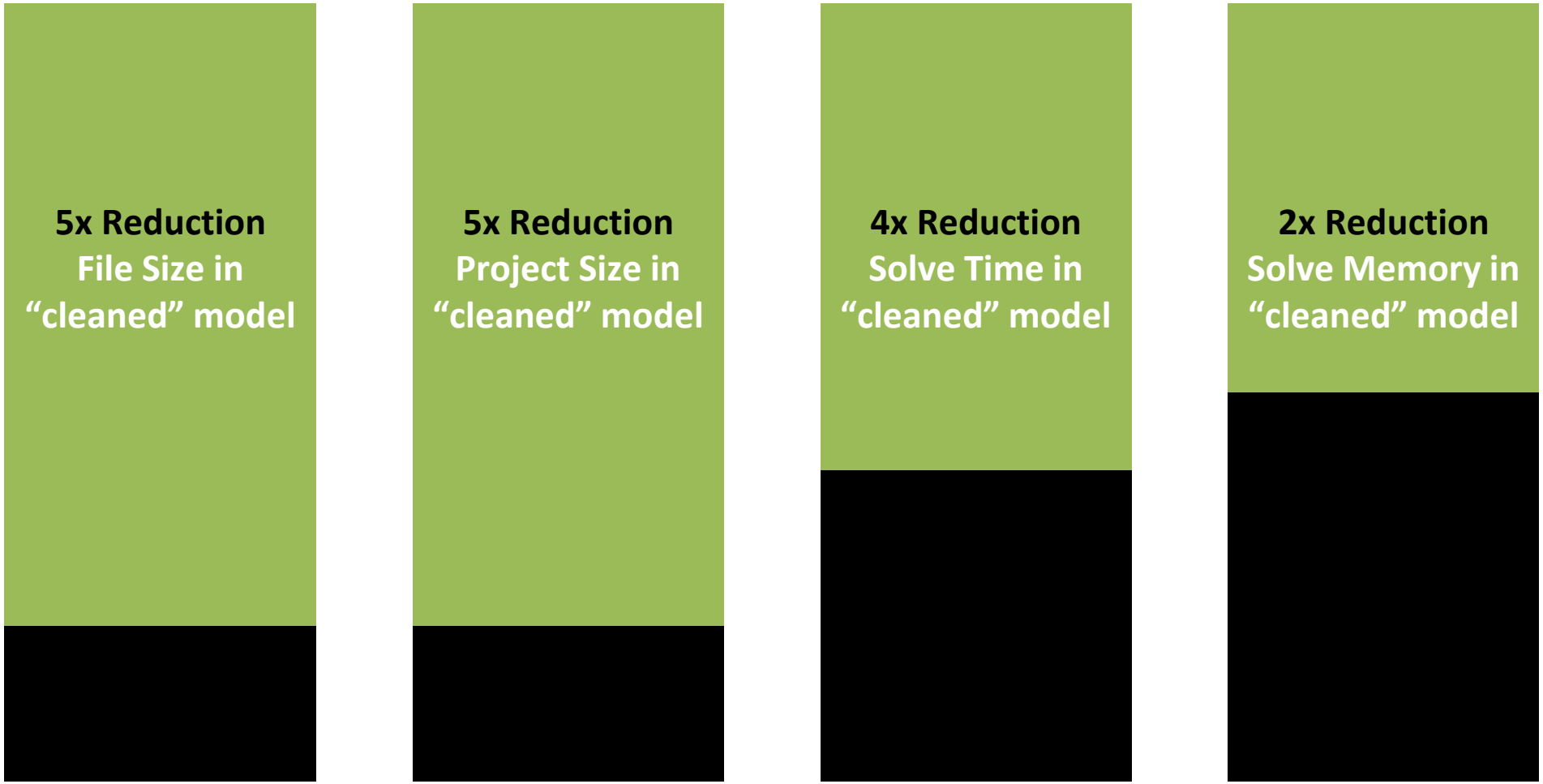

Note these differences are specific to this project and workflow

Section Takeaways

- Different cleanup methods offer varying degrees of cleanup success
- Potential electrical simulation errors can be avoided with geometry cleanup
- Geometry cleanup is critical for successful and efficient electrical simulation

Predicted Impact to Electrical Performance

Zak Speraw | Samtec, Inc.

Electrical Impact – 0.9 in-lbs of Torque

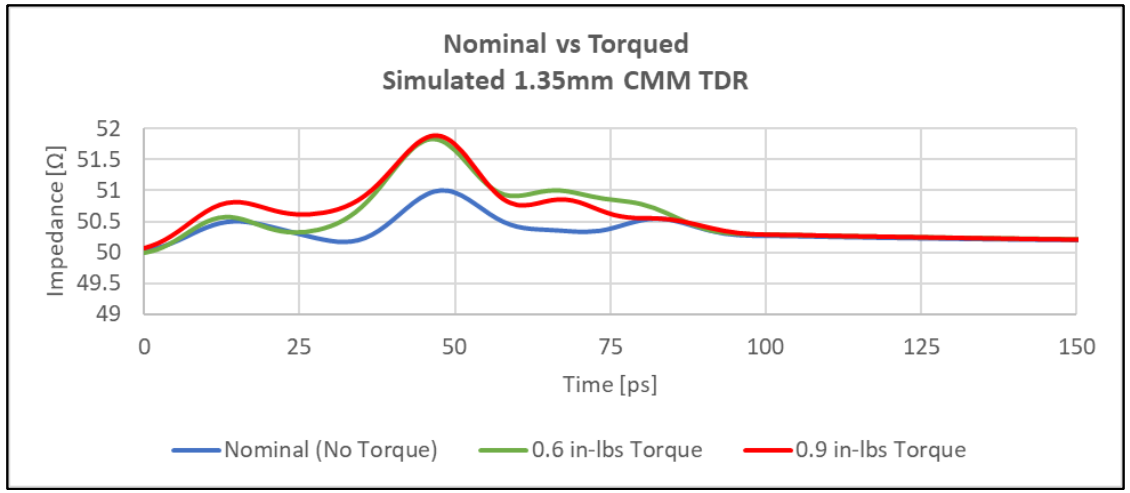

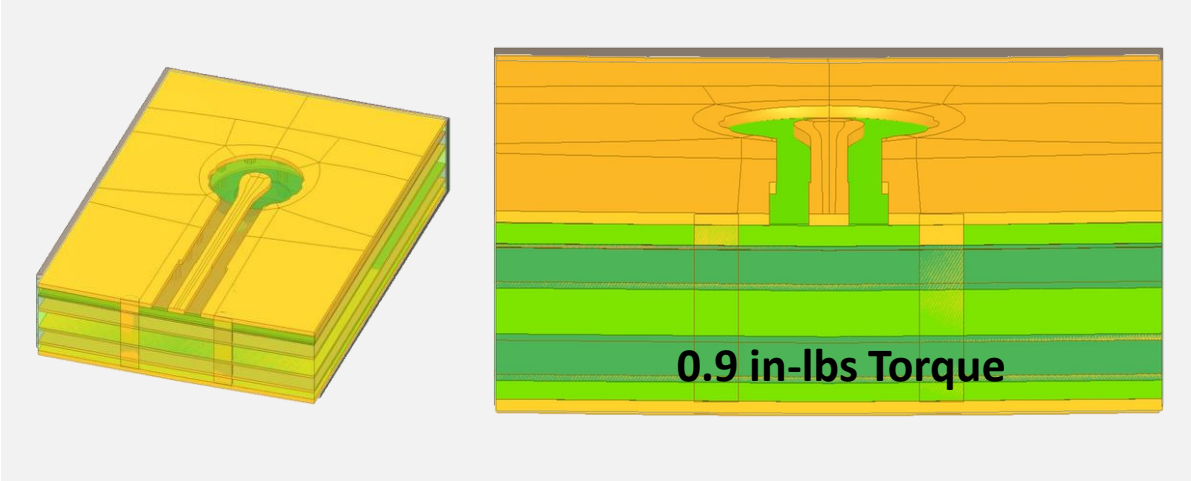

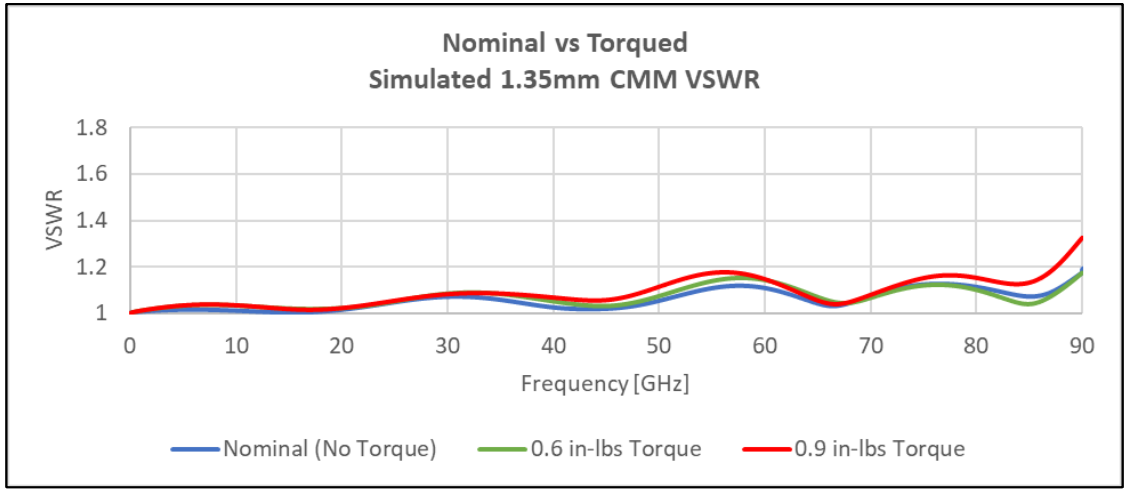

When the pin and pad are flush, the VSWR is optimal with nominal impedance

Standard 0.6 in-lbs torque did lift the impedance profile slightly but impact on VSWR was minimal

Over-torqued 0.9 in-lbs resulted in a larger impact on VSWR, particularly at higher frequencies

Electrical Impact of PCB Warpage

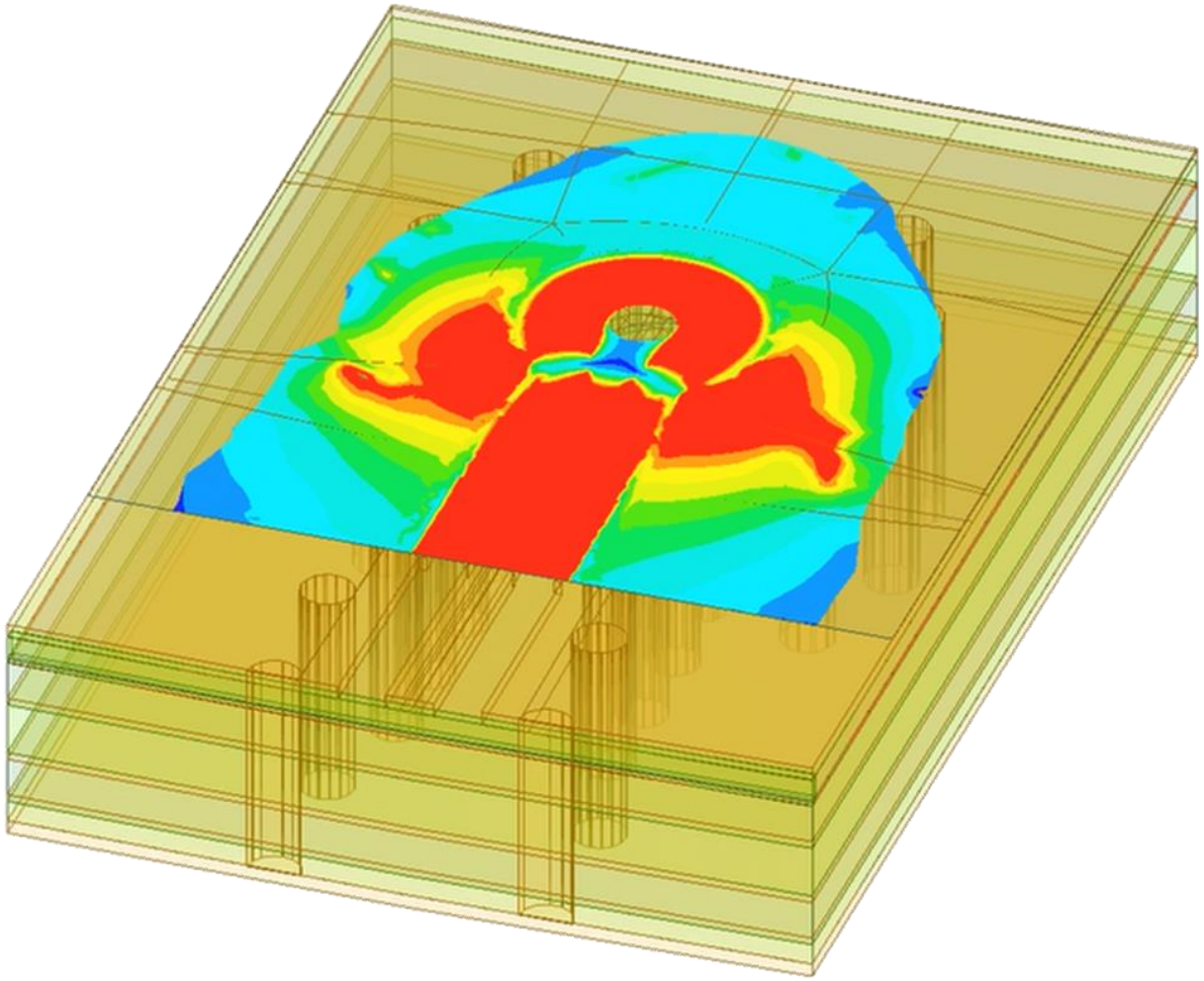

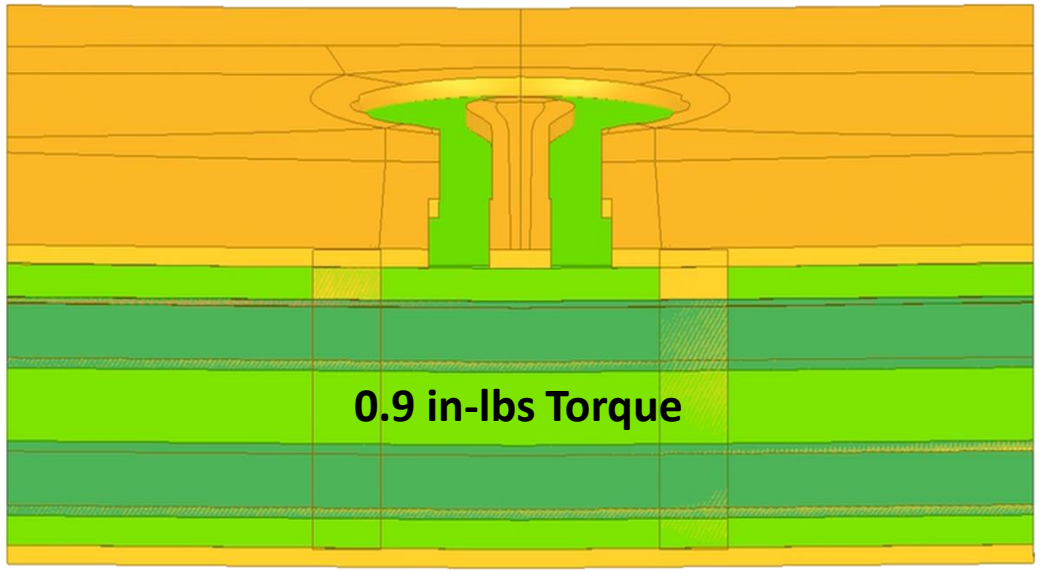

However, increased PCB warpage created a cavity between the connector and PCB

Electromagnetic leakage into any cavity can lead to electrical suckout and degrade performance

Section Takeaways

- 0.6 in-lbs of assembly torque showed minimal impact on electrical performance for this case
- Over-torquing increases risk of electrical performance degradation
- Warped PCBs can create a cavity and increase risk of electrical suck out

Blind Pin Alignment

Michael Griesi | Samtec, Inc.

Compression Mount Challenges

Pin Compression into PCB

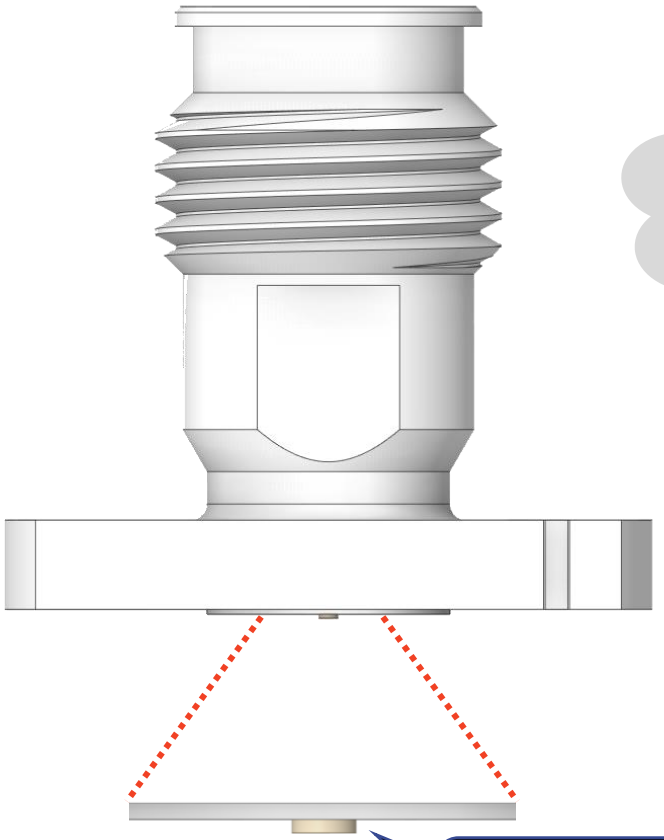

Could the pin push into the PCB pad or dielectric?

Pin Protrudes ≈0.0025” to ensure contact with pad

Blind Pin Alignment on PCB

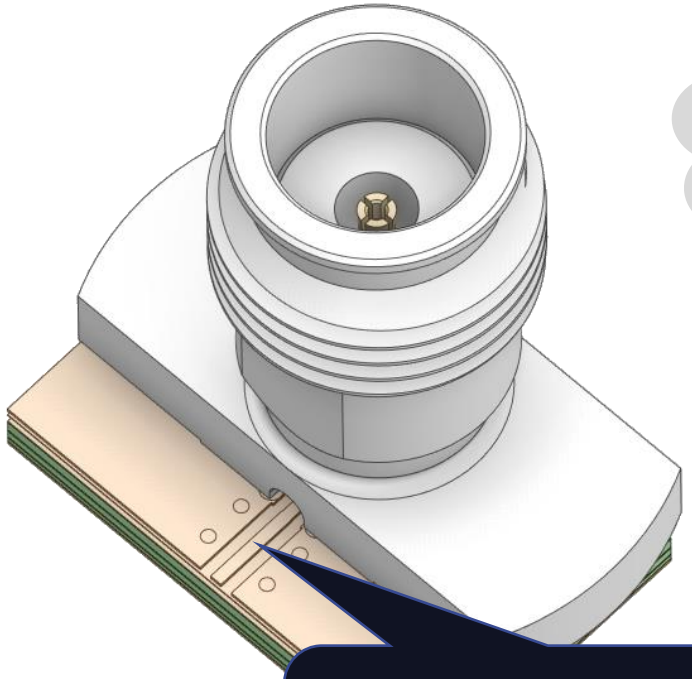

How can I verify alignment if I can’t see the pin?

Pin should contact center of pad but visual confirmation is not possible

Compression Mount Challenges

1. What are the misalignment degrees of freedom?
2. What is the sensitivity of each degree of freedom?
3. How can we mitigate misalignment?

Blind Pin Alignment on PCB

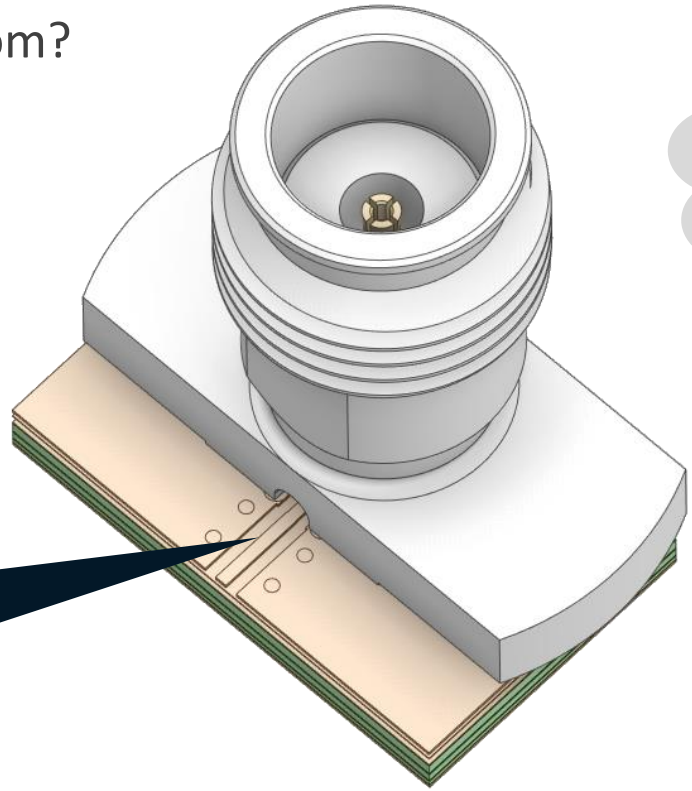

Pin should contact center of pad but visual confirmation is not possible

How can I verify alignment if I can't see the pin?

Misalignment Degrees of Freedom

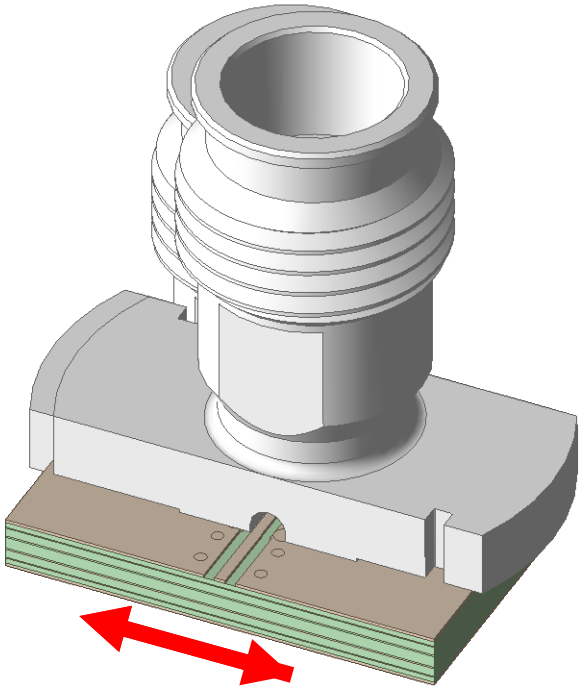

Side to Side

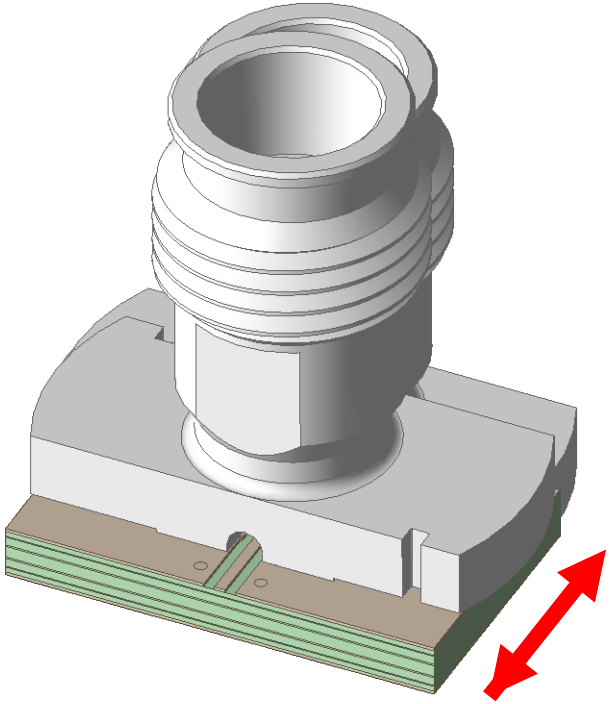

Back and Forth

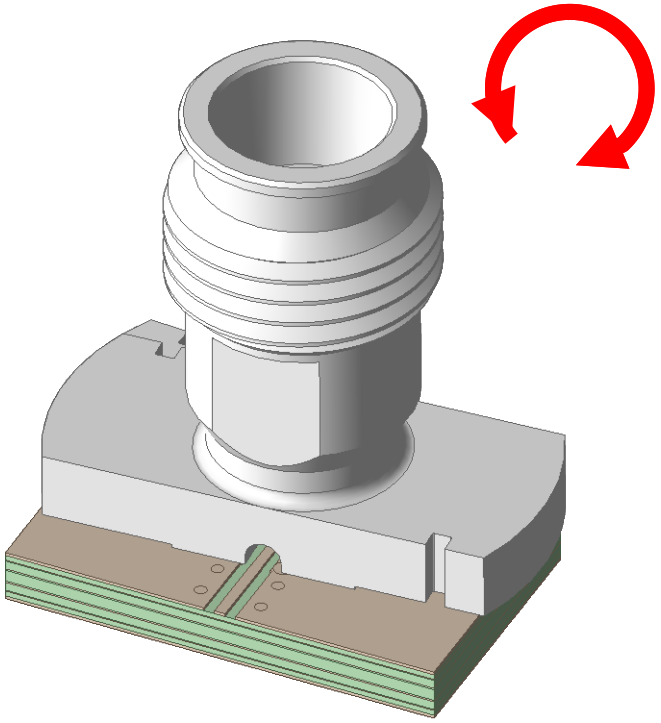

Rotational

Side to Side Misalignment

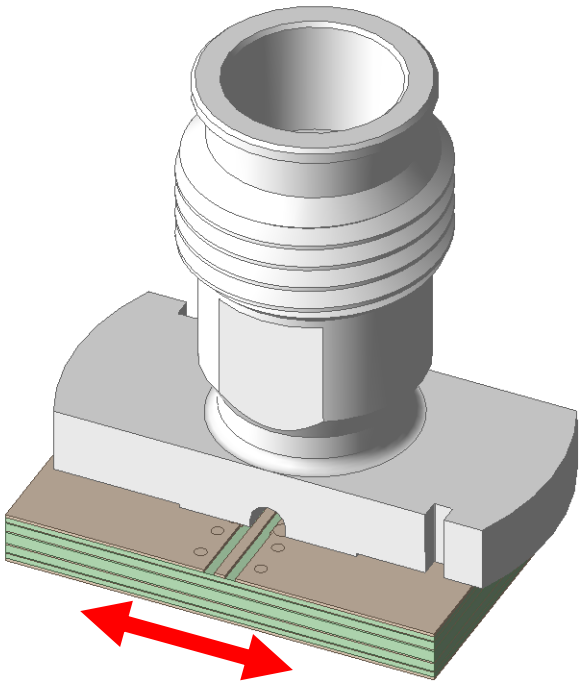

Side to Side

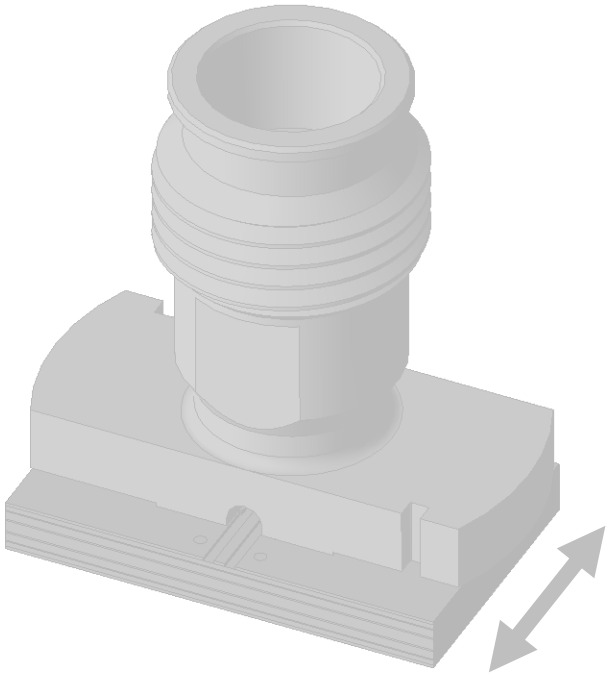

Back and Forth

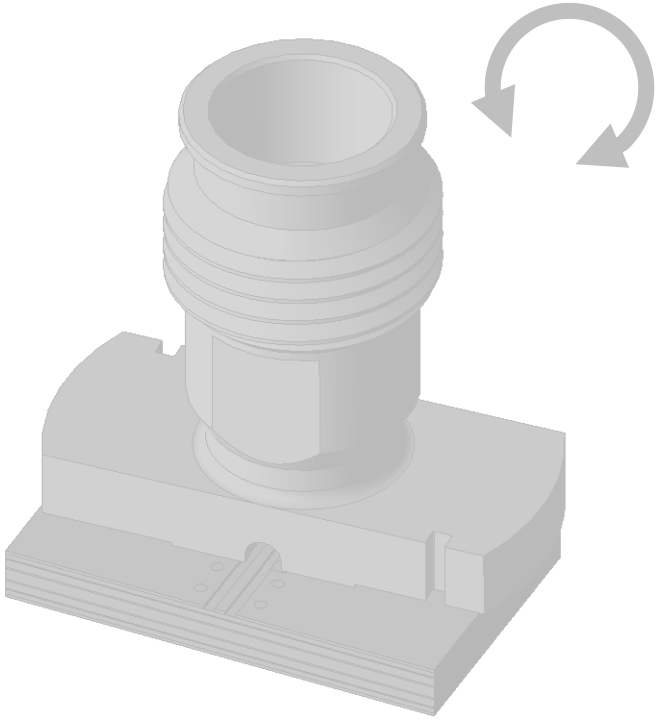

Rotational

Side to Side Misalignment

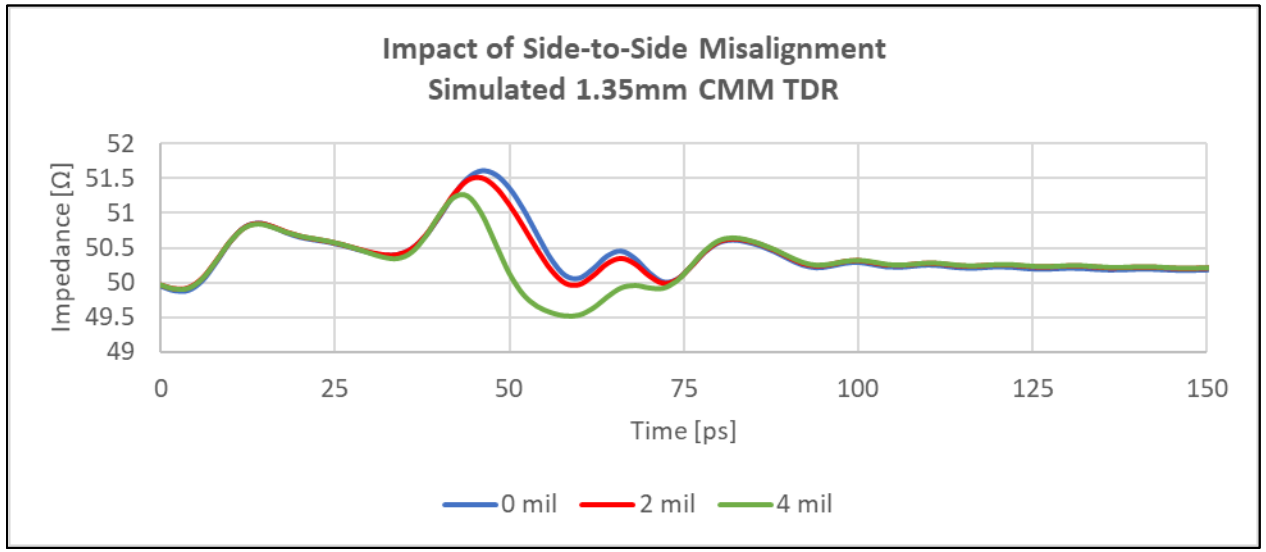

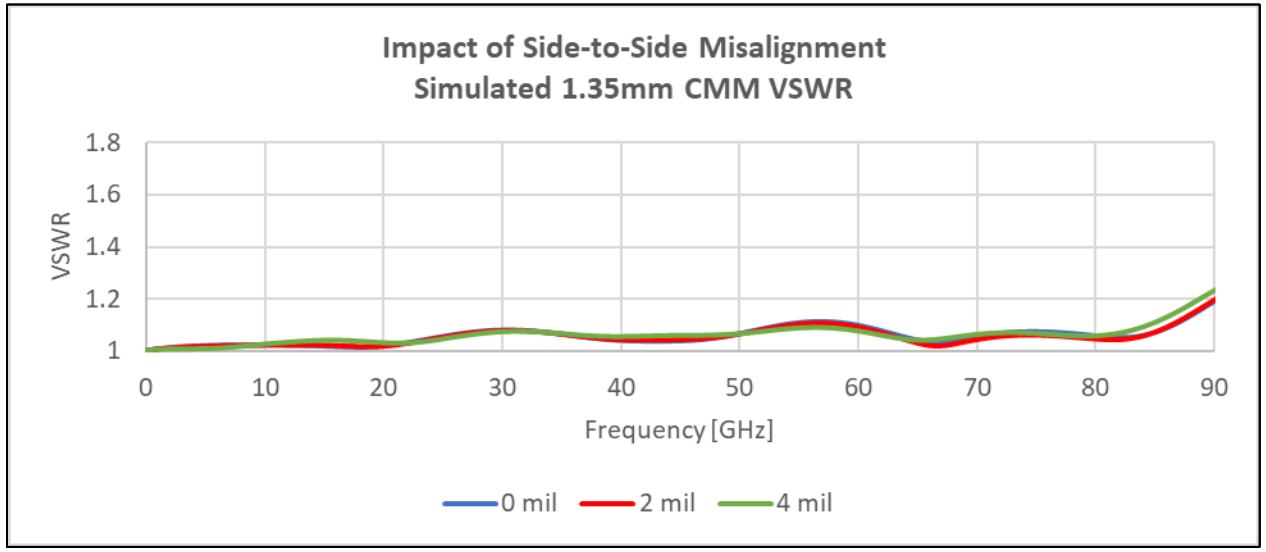

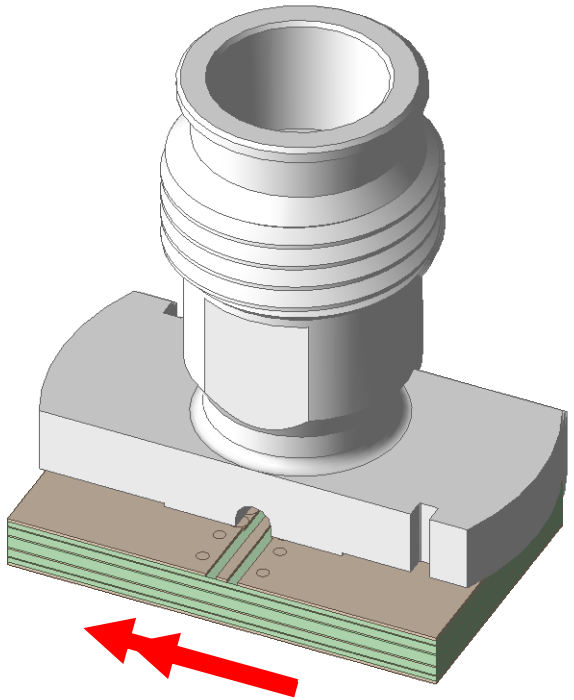

VSWR was not very sensitive to tangential misalignment

Back and Forth Misalignment

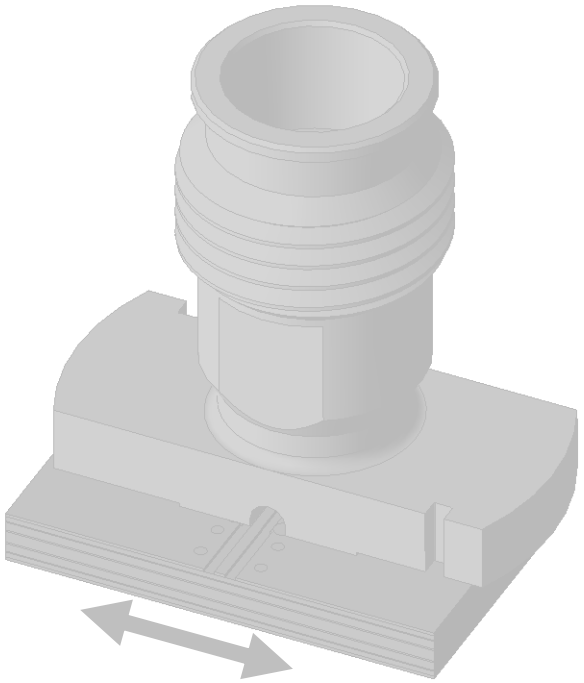

Side to Side

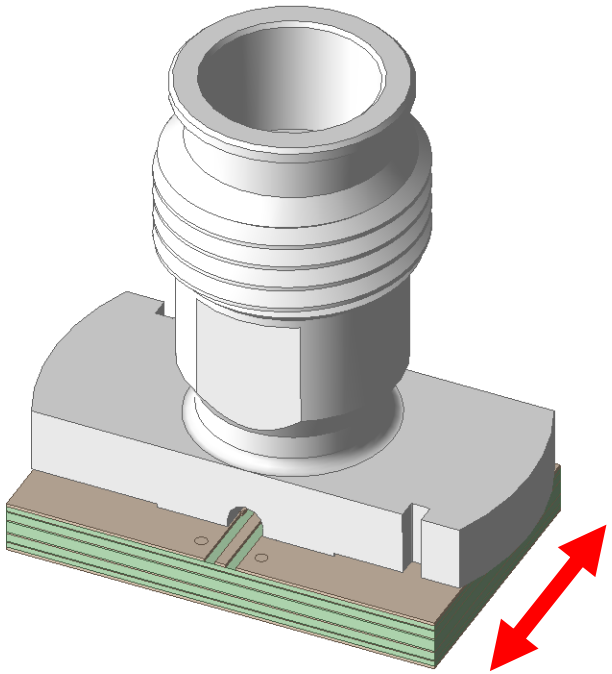

Back and Forth

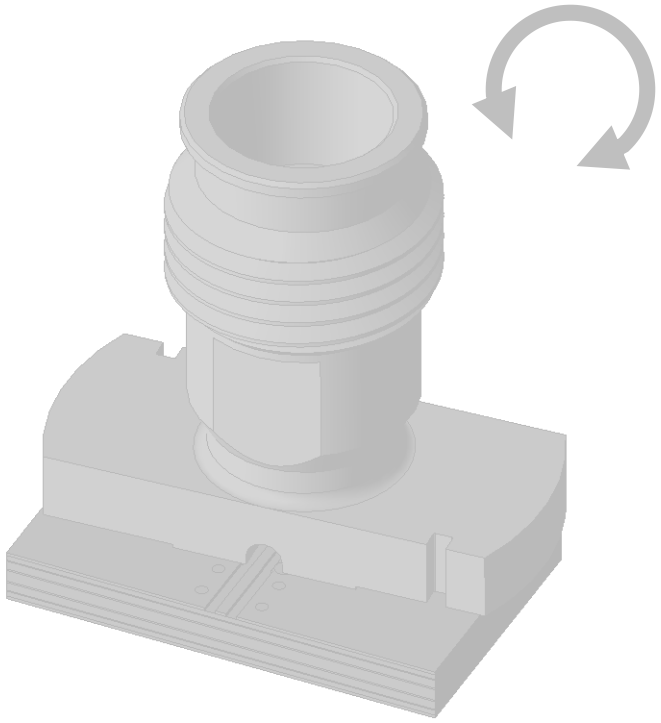

Rotational

Back and Forth Misalignment

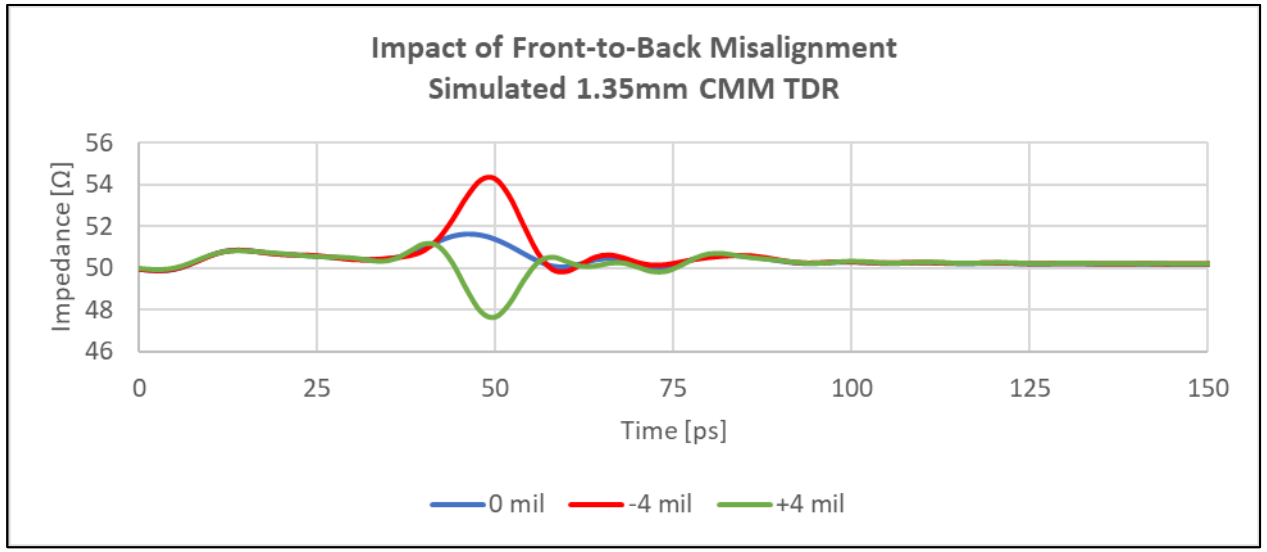

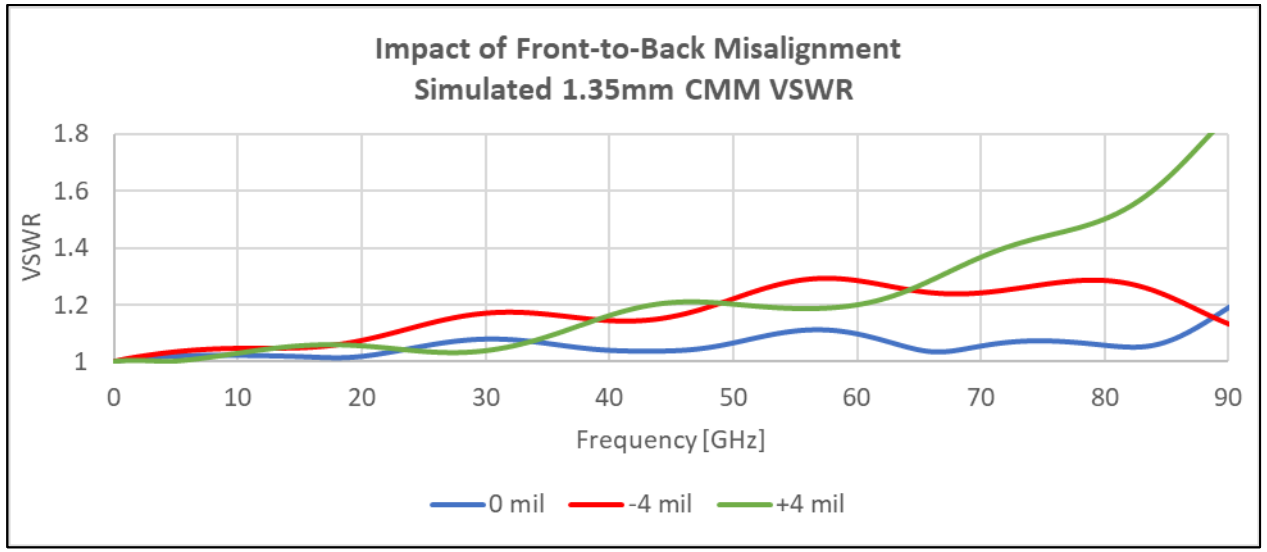

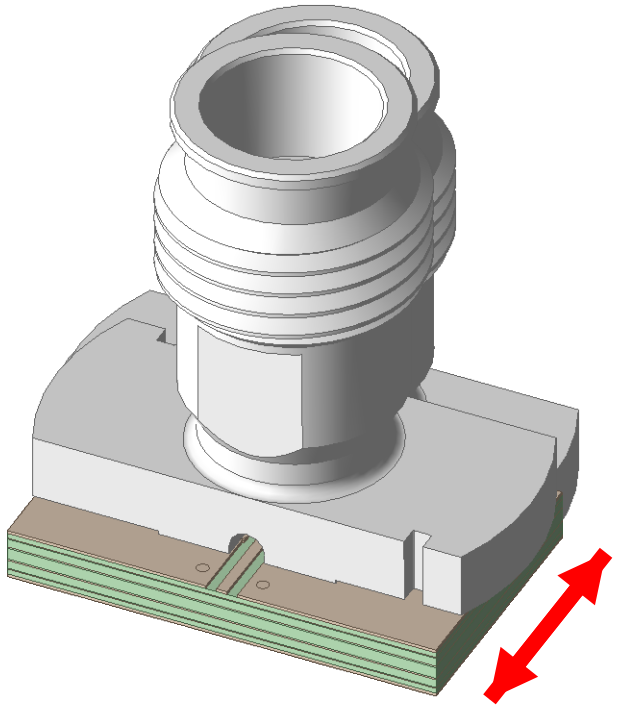

VSWR was very sensitive
to back and forth misalignment

Rotational Misalignment

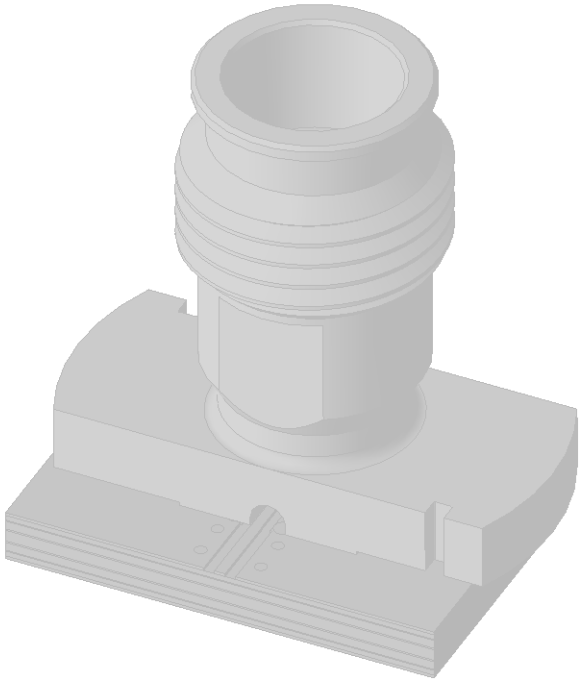

Side to Side

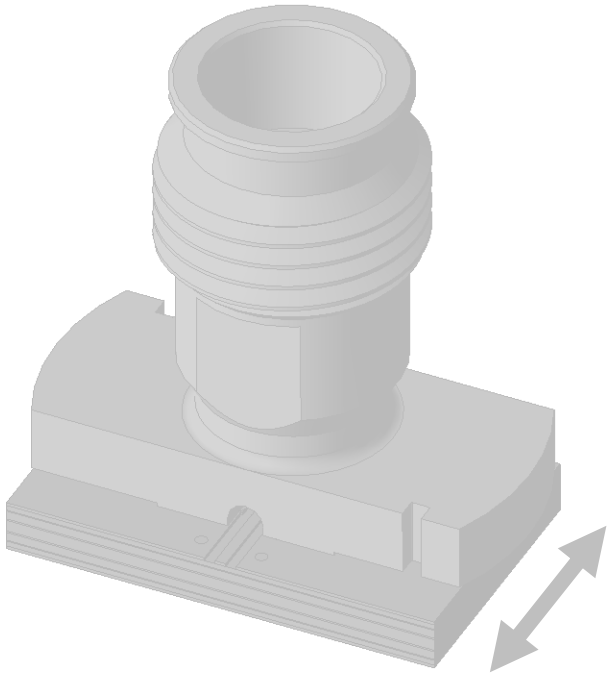

Back and Forth

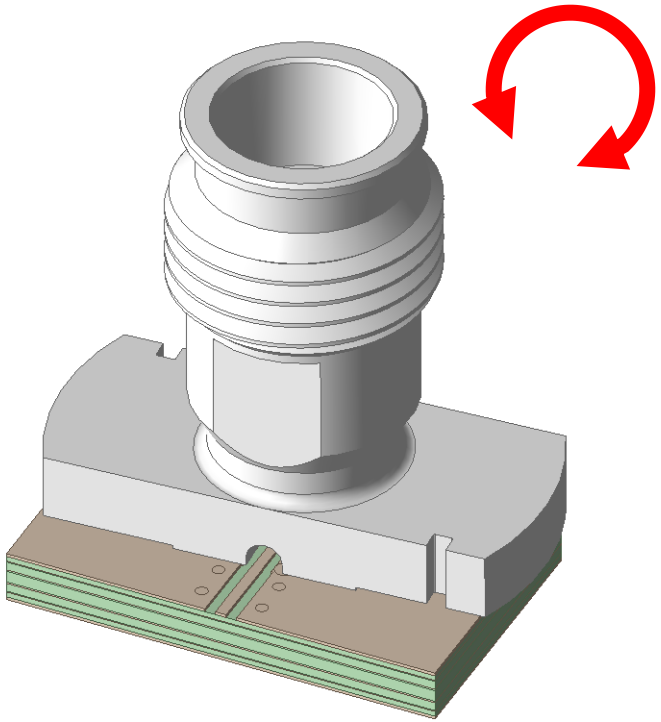

Rotational

Rotational Misalignment

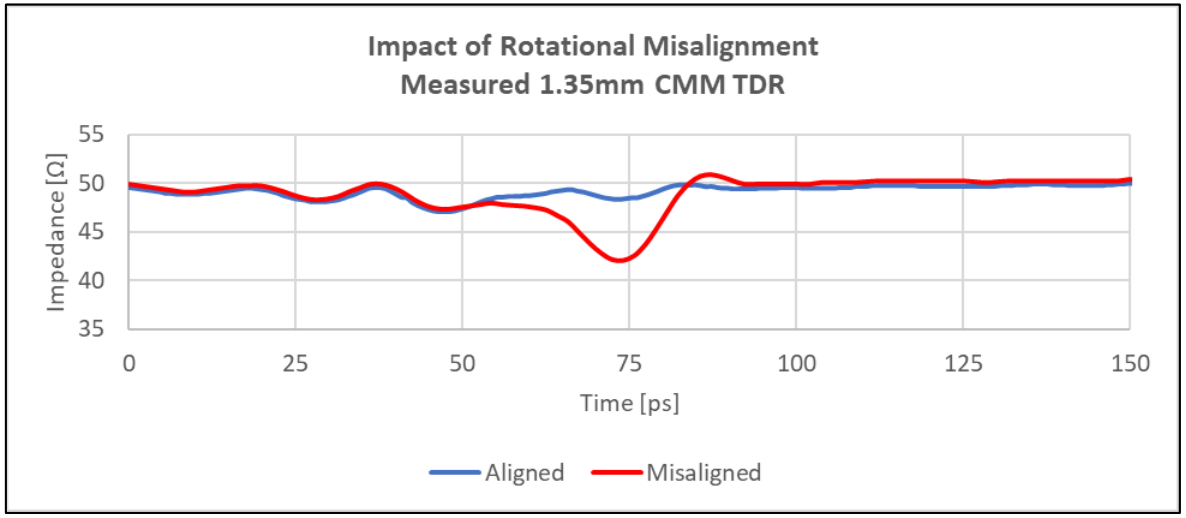

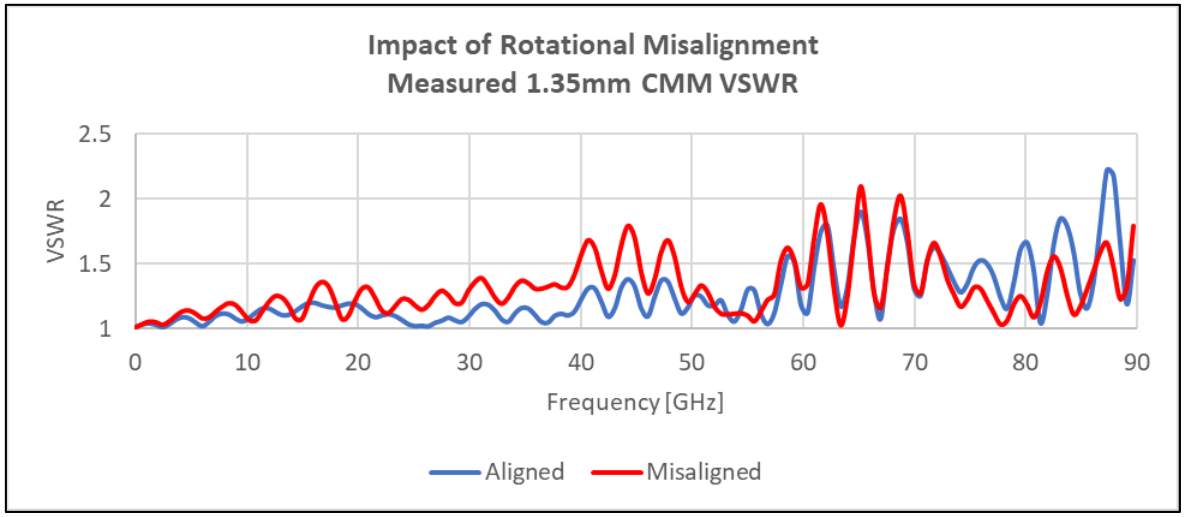

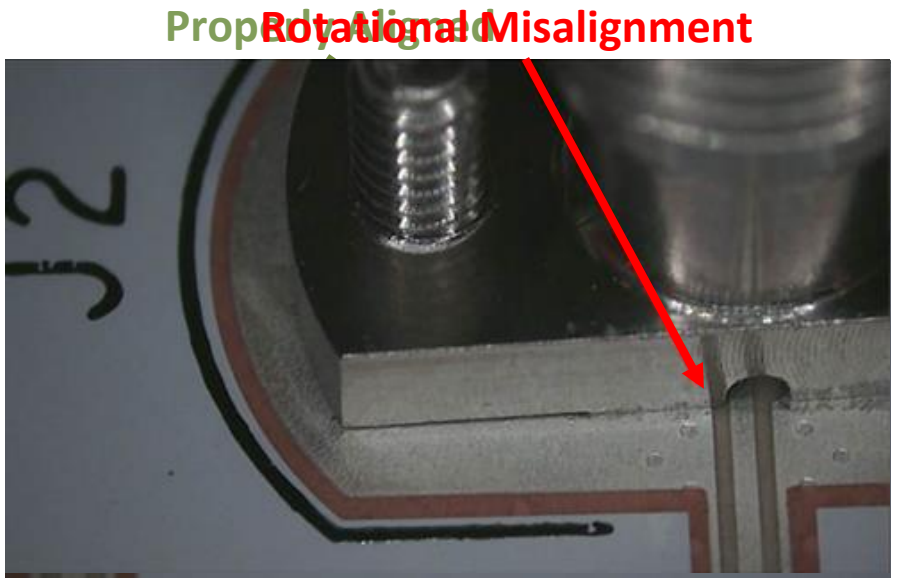

VSWR was **moderately sensitive** to rotational misalignment

Precision RF Connector PCB Launches for 224 Gbps Devices

Microstrip versus Stripline

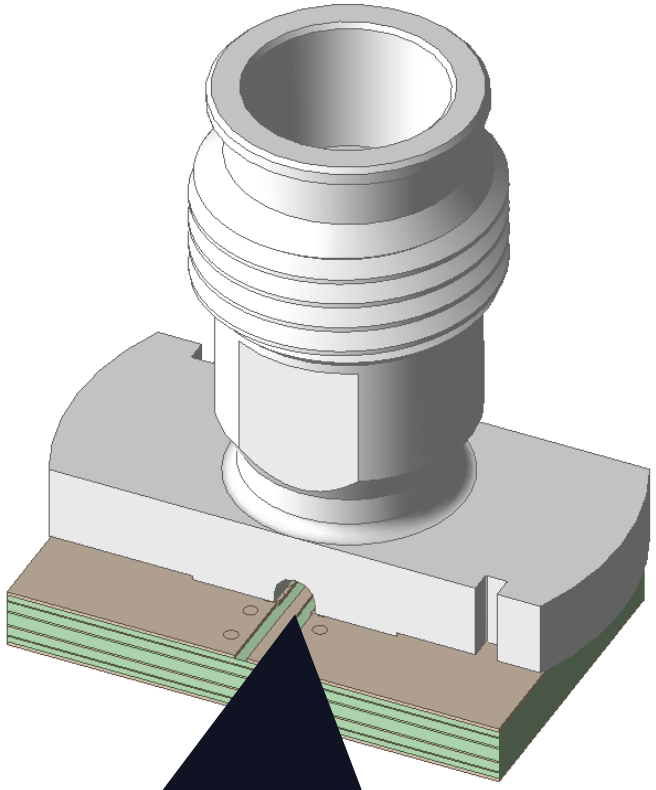

Microstrip has an inherent indicator to minimize side-to-side and rotational misalignment but not back-and-forth

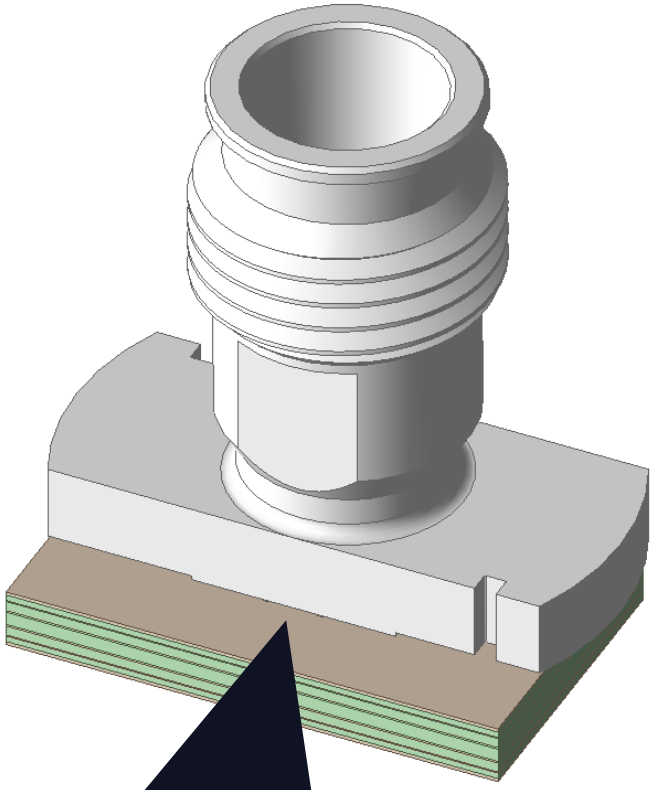

Stripline has no inherent indicator to aid with alignment and is therefore, entirely blind

The Solution to Pin Alignment

RF Compression Mount Alignment Indicator

Alignment Features

Exclusive to Samtec

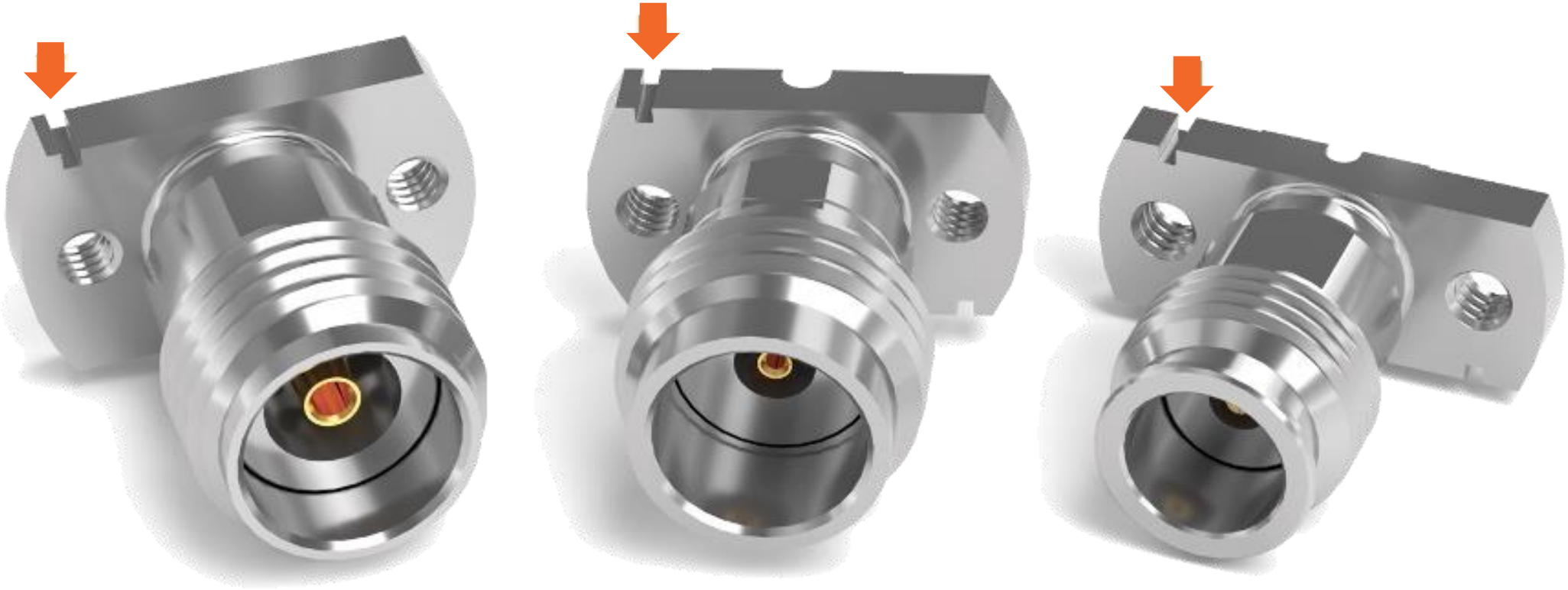

Align Connector the First Time - Every Time

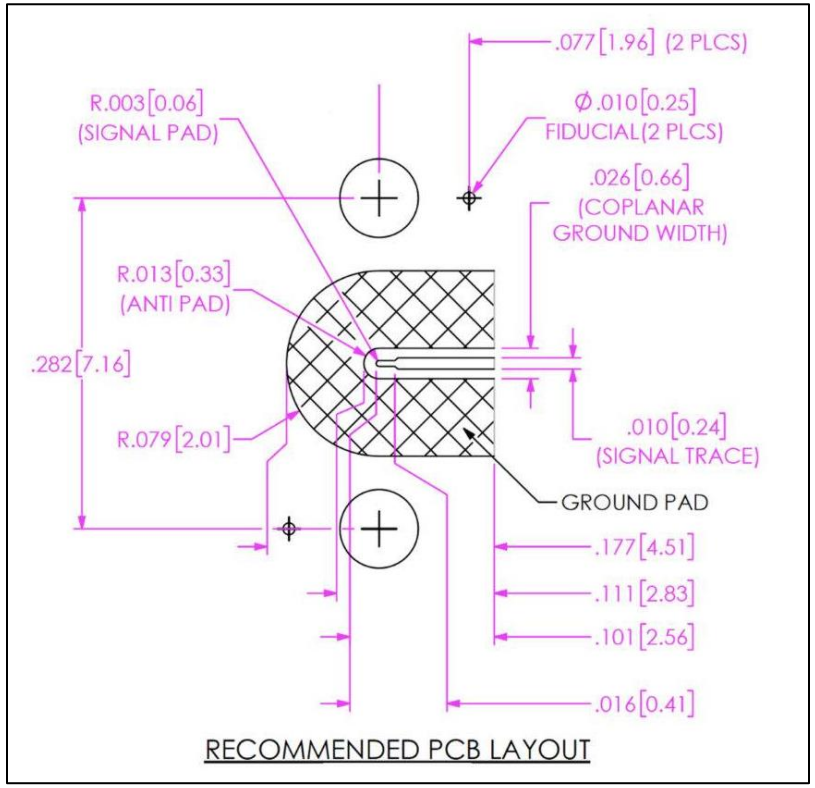

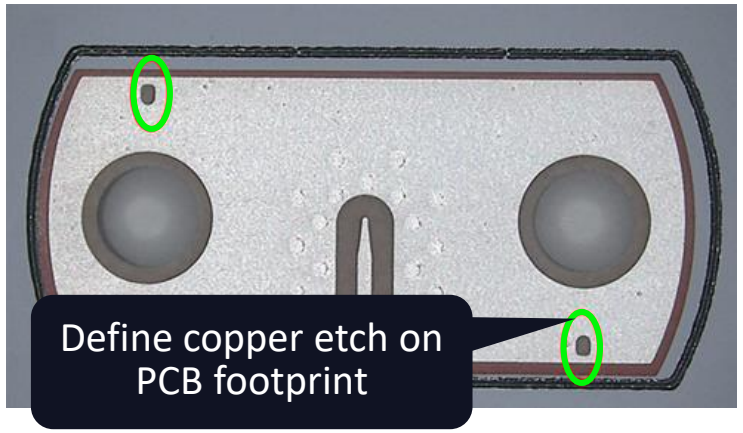

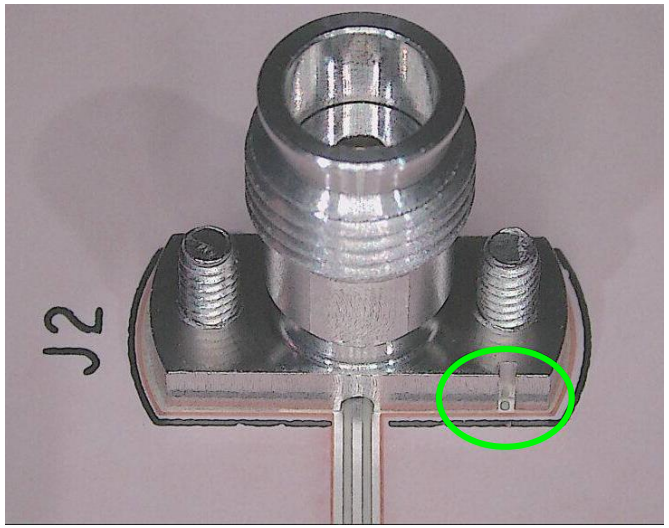

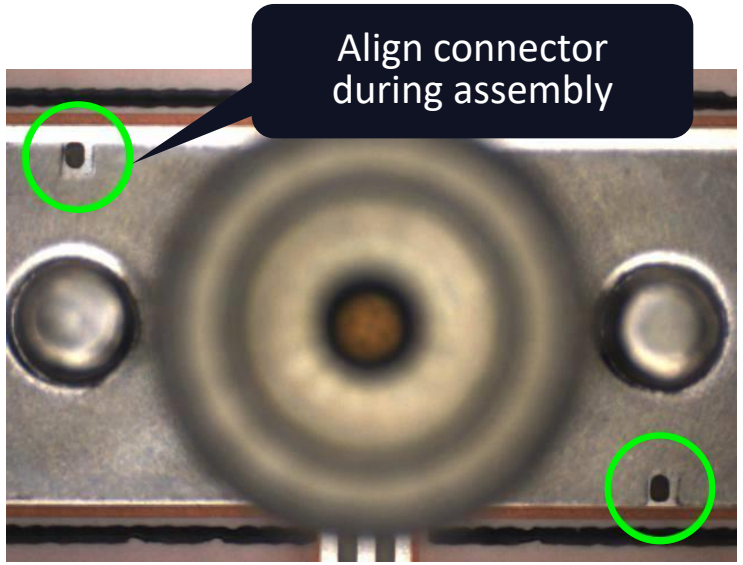

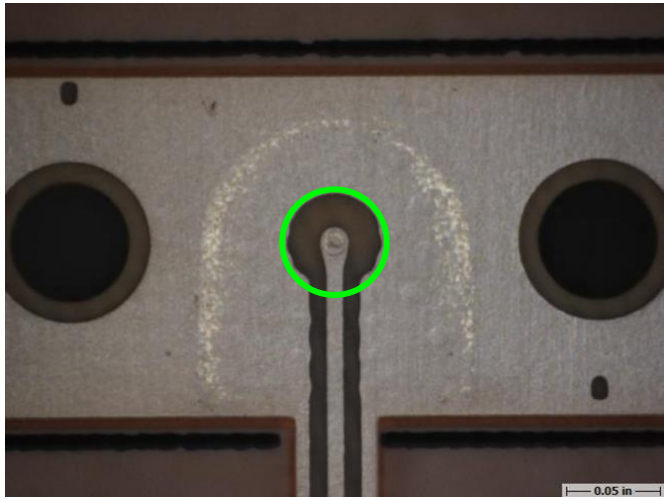

Section Takeaways

- Proper alignment is critical for reliable electrical performance
- Alignment features on connector can ensure proper alignment for reliable performance

Actual Performance

1.35mm Vertical Compression Mount Microstrip (CMM)

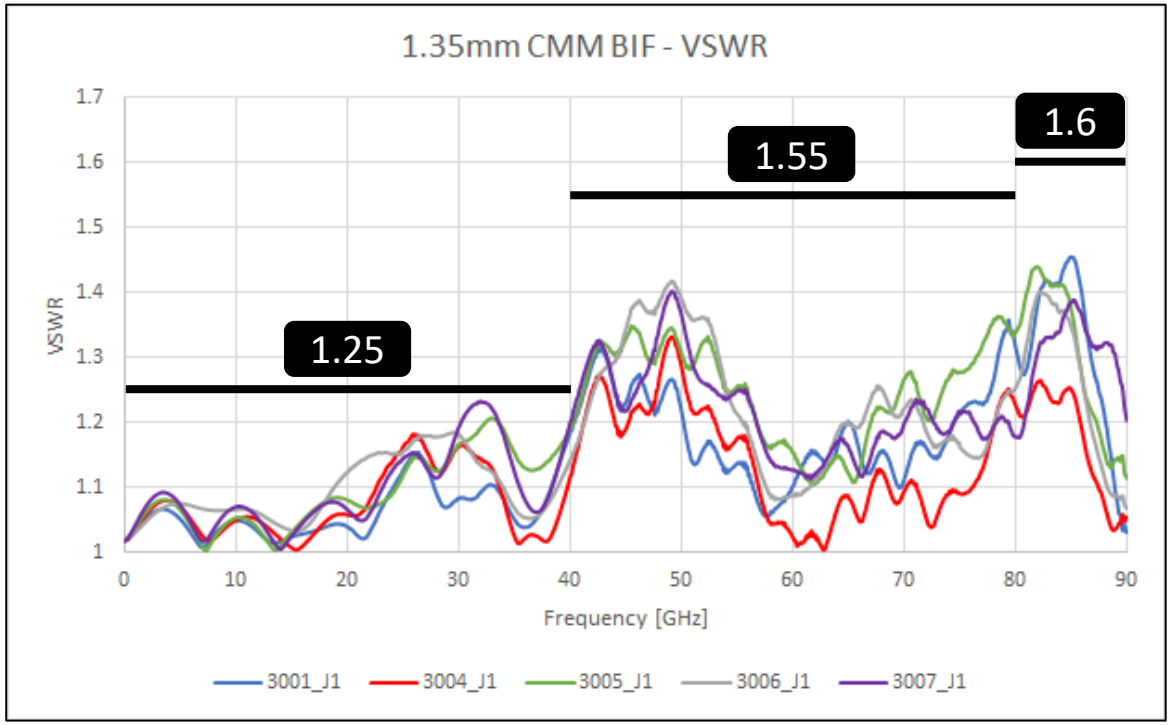

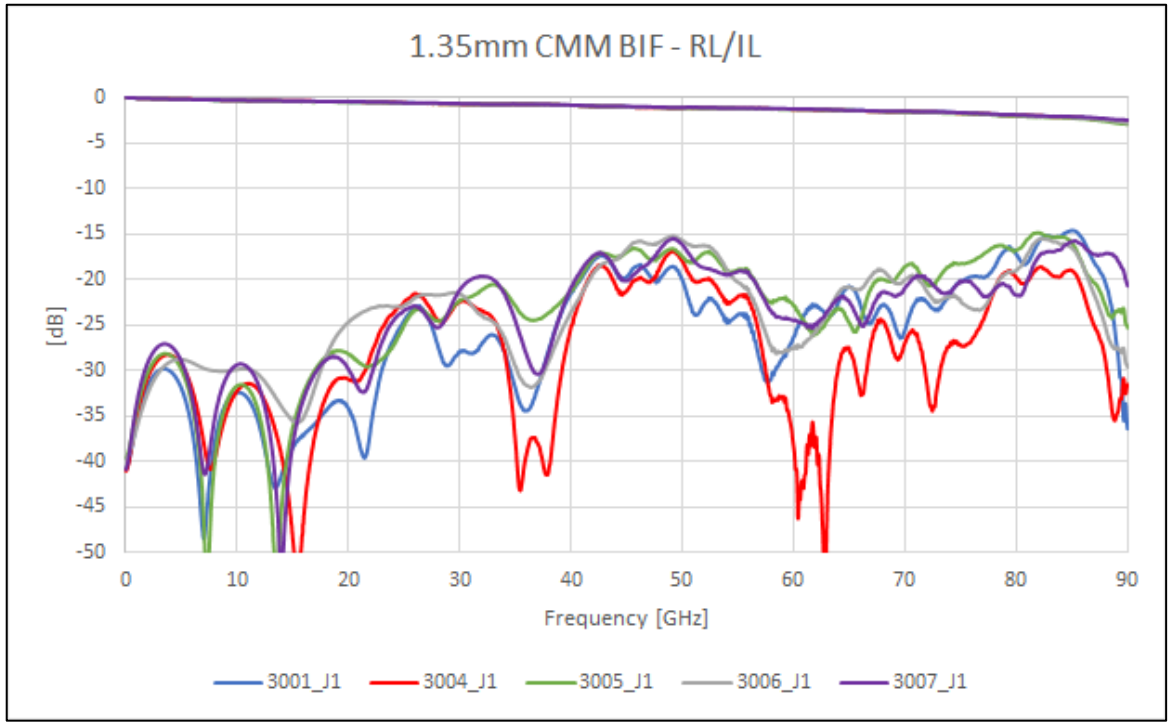

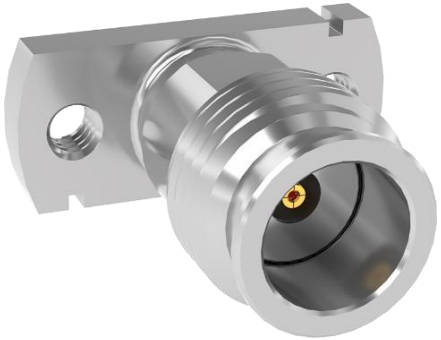

MEASURED PERFORMANCE

The results above used automatic fixture removal (AFR) on the measurement to isolate the connector and PCB launch on the top layer of a 6-layer Tachyon 100G.

135-CM/CMM

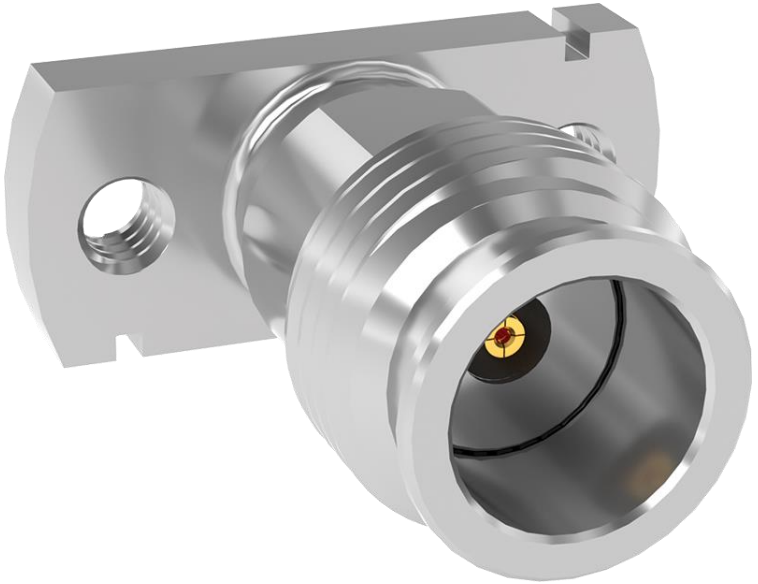

135-J-P-VP-ST-XXX-X-X

TERMINATION
-CM: COMPRESSION MOUNT STRIPLINE
-CMM: COMPRESSION MOUNT MICROSTRIP

OPTION
-1: WITHOUT SCREWS
-2: WITH SCREWS

PACKAGING
-BLANK: INDIVIDUALLY BAGGED
-B: BULK PACKAGED (QTY=100 MAX)

ELECTRICAL DATA

https://www.samtec.com/products/135

Impedance	50 Ohm
Frequency Range	DC to 90 GHz
VSWR[1]	DC to 40 GHz: 1.25:1 Max 40 GHz to 80 GHz: 1.55:1 Max 80 GHz to 90 GHz: 1.6:1 Max
Insertion Loss[2]	$0.03\sqrt{F\ (GHz)}$ dB Max
Insulation Resistance	5000 MOhm Min
Voltage Rating (Sea Level)	170 Vrms Max
DWV	475 Vrms Min (sea level)
Torque (board mount)	0.5 ~ 0.8 in-lbs

[1]VSWR per connector when tested on Samtec multi-layer test PCB
[2]Single connector insertion loss only

Conclusion

Top Takeaways

Mechanical pin compression can occur but PCB warpage might occur before pin compression

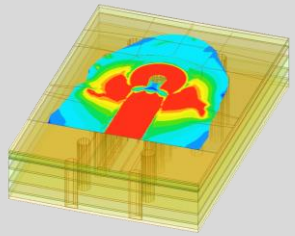

PCB warpage can lead to electrical suck outs

For maximum performance, follow the recommended mounting torque and visually inspect for warpage

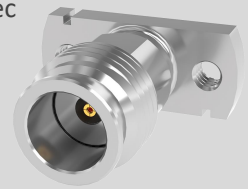

For maximum performance, use RF Compression Mount Connectors with Alignment Features

samtec | gEEk® spEEk

samtec.com/geekspeek

geekspeek@samtec.com

SIG@samtec.com